Multi-Object Spectroscopy in the Next Decade: Big Questions, Large Surveys, and Wide Fields
ASP Conference Series, Vol. 507
I. Skillen, M. Balcells, and S. C. Trager, eds.
© 2016 Astronomical Society of the Pacific

DAG Telescope: A New Potential for MOS Observations

Sinan Alis,[1] Cahit Yesilyaprak,[2,3] and Sinan Kaan Yerli[4]

[1]*Istanbul University, Department of Astronomy and Space Sciences, 34119 Istanbul, Turkey;* salis@istanbul.edu.tr

[2]*Ataturk University, Science Faculty, Astronomy and Astrophysics Department, 25240 Erzurum, Turkey;* cahity@atauni.edu.tr

[3]*Ataturk University, Astrophysics Research and Application Center, 25240 Erzurum, Turkey;* cahity@atauni.edu.tr

[4]*Middle East Technical University, Physics Department, 06531 Ankara, Turkey;* sinan@sinan.physics.metu.edu.tr

Abstract. **East Anatolian Observatory** (*aka*. DAG) is a national project supported by the Turkish Government for building a 4 m class telescope which will be working in the optical and near-IR domain. As the tender process has been completed and kick-off to the telescope and the mirror production has been initiated, the project team is looking for possible collaborations for the focal plane instrumentation. This contribution is intended to describe the DAG project and to show its opportunities for a state-of-the-art MOS instrument.

1. Introduction

The need for a medium-sized telescope in the Turkish astronomical community arose a decade after the national observatory (TUG[1]) had been established. As of today the largest telescope that is accessible by the community is 1.5 m in diameter. Given the developments in the astronomy world, a team of young researchers gathered around the idea of having a 4 m class telescope (Yesilyaprak et al., 2011; Feder, 2014). Therefore, the DAG[2] project was started. The project dates back to 2008 but the final approval by the state and the kick-off took place in 2012.

2. Current Status of the Project

As of February 2015, most of the infrastructure work is completed on the summit. Power, internet (fiber-optic) and water is available at the summit. High-capacity generators will be installed in the summer 2015. All necessary geological examinations are done and a series of seismographs are installed for monitoring tectonic movements.

[1]http://www.tug.tubitak.gov.tr

[2]http://dag-tr.org

There is a dirt road to the summit which will be cleaned and finalized after the installation of the telescope and the dome.

Tender for manufacturing the telescope happened in October 2014 in Erzurum. **AMOS** (Advanced Mechanical and Optical Systems) won the tender and associated design review studies have already started. There will be a tender for the dome in 2015. With the current progress rate, the first-light is expected in 2019.

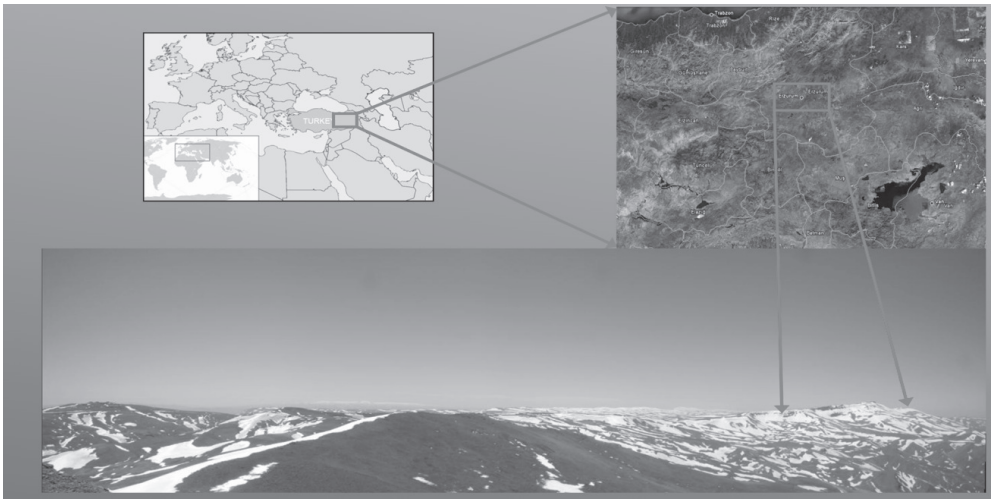

Figure 1. Location of the DAG telescope.

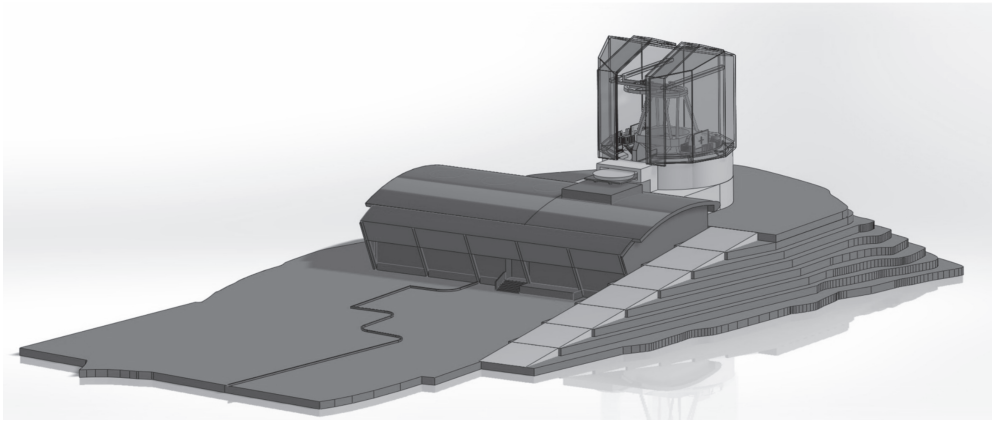

Figure 2. Conceptual design of the DAG telescope. *Courtesy of the DAG project.*

3. DAG Telescope

DAG telescope will be installed on Karakaya mountain range in Erzurum district of Turkey. The altitude of the observatory is 3100 m a.s.l. DAG telescope is going to be a Ritchey-Chrétien with two Nasmyth foci. The coating of the mirror will allow

to observe in the wavelength region of 0.4-2.5 μ. Thus, DAG telescope will provide a window in the near-IR domain and it will be an enlargement of the wavelength region to which the community has access.

Ground-layer adaptive optics (AO) will be provided in the near-future for at least one focal point (Keskin et al., 2014). Depending on the budget, both foci may be equipped with AO. The AO system will be built locally by the leadership of Onur Keskin from Isik University, Istanbul. An associated budget plan is submitted to the state both for first light instruments and for adaptive optic laboratory.

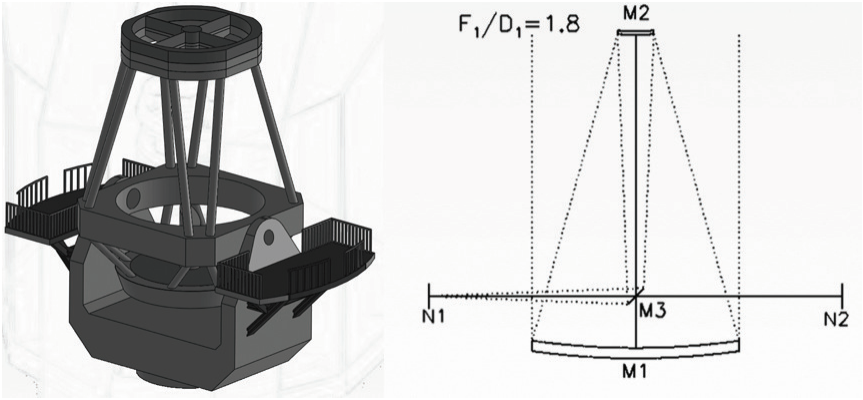

Figure 3. The mechanical and the optical designs of the DAG telescope. *Courtesy of the DAG project and Laurent Jolissaint.*

4. Seeking Instrument Collaborations

DAG telescope will be a revolution to the Turkish astronomical community in many ways. It will be a leap from 1.5 m optical telescope to a 4 m optical+NIR telescope. For that purpose a large group of people worked on the scientific rationale of the telescope. The telescope is expected to be used for a wide range of scientific purposes. The scientific rationale written towards that angle can be found at the project website. The list of topics covered in the rationale also includes possible future topics that are not extensively studied in the Turkish community.

Table 1. Possible instrument layout for the focal points.

	N1 (Narrow FOV)	N2 (Large FOV)
Optical	Imaging+Spectroscopy	MOS
Near-IR	Imaging+Spectroscopy	State-of-the-art

In order to realize these studies, a wide range of instruments are needed. Hence, DAG telescope is designed so that each of the Nasmyth foci can accommodate three

instruments. An optimistic layout for the focal points can be seen in Fig. 3. Imaging and spectroscopy are needed in the narrow field of view as the scientific rationale points out. On the other hand, a state-of-the-art instrument or a new technology instrument can be installed at the other foci where the field-of-view is larger. That instrument could be a part of a collaboration that can create some synergies with other telescopes and instruments around the world. This is especially expected in the context of northern and southern hemispheres. As the telescope's unvignetted field-of-view will be 20 arcminutes, DAG will be an appropriate facility for multi-object spectroscopy.

Acknowledgments. DAG Project is supported by the Ministry of Development of Republic of Turkey through the project 2011K120230. The authors are grateful to Ataturk University and ATASAM for continuous and invaluable support to the project. SA is grateful to the conference organizers for their great hospitality.

References

Feder, T., 2014, Physics Today, AIP Publishing, Volume 67, Issue 10, 26
Keskin, O. et al., 2014, Proceedings of the SPIE, Volume 9145, id. 914547, 12.
Yesilyaprak, C. et al., 2011, Proceedings of the Conference *Telescopes from Afar*, id.74[3]

[3] http://tfa.cfht.hawaii.edu/posters/Yerli_tfa_poster.pdf