COST OPTIMUM DESIGN OF REINFORCED CONCRETE BRIDGE PIERS FOR STANDARD HIGHWAY BRIDGES

A THESIS SUBMITTED TO
THE GRADUATE SCHOOL OF NATURAL AND APPLIED SCIENCES
OF
MIDDLE EAST TECHNICAL UNIVERSITY

BY

CELIL ORAK

IN PARTIAL FULFILLMENT OF THE REQUIREMENTS
FOR
THE DEGREE OF MASTER OF SCIENCE
IN
CIVIL ENGINEERING

FEBRUARY 2022

Approval of the thesis:

COST OPTIMUM DESIGN OF REINFORCED CONCRETE BRIDGE PIERS FOR STANDARD HIGHWAY BRIDGES

submitted by **CELİL ORAK** in partial fulfillment of the requirements for the degree of **Master of Science** i**n Civil Engineering, Middle East Technical University** by,

Prof. Dr. Halil Kalıpçılar
Dean, Graduate School of **Natural and Applied Sciences** _____

Prof. Dr. Erdem Canbay
Head of the Department, **Civil Engineering** _____

Prof. Dr. Barış Binici
Supervisor, **Civil Engineering, METU** _____

Examining Committee Members:

Prof. Dr. Kağan Tuncay
Civil Engineering, METU _____

Prof. Dr. Barış Binici
Civil Engineering, METU _____

Prof. Dr. Yalın Arıcı
Civil Engineering, METU _____

Prof. Dr. Erdem Canbay
Civil Engineering, METU _____

Doc. Dr. Alper Aldemir
Civil Engineering, Hacettepe University _____

Date: 10.02.2022

I hereby declare that all information in this document has been obtained and presented in accordance with academic rules and ethical conduct. I also declare that, as required by these rules and conduct, I have fully cited and referenced all material and results that are not original to this work.

Name Last name : Orak, Celil

Signature :

ABSTRACT

COST OPTIMUM DESIGN OF REINFORCED CONCRETE BRIDGE PIERS FOR STANDARD HIGHWAY BRIDGES

Orak, Celil
Master of Science, Civil Engineering
Supervisor : Prof. Dr. Barış Binici

February 2022, 108 pages

Bridges are among the most important cost items of transportation projects in Turkey and in the world. In bridge engineering, superstructures are designed with optimization through years of experience. However, the same is not true for infrastructre elements such as piers. The evaluation of the bridge piers,built in Turkey and around the world, considering structural design shows that they are "overdesign" elements suitable for optimization. The ratio of the cost of the piers to the total bridge cost is around 10-15%. Bridge piers are generally built with reinforced concrete similar to other infrastructure. An economical design is obtained using trial and error method: the most economical design in question is a work that requires a lot of time. In this thesis, it is shown that a more economical design of standard highway bridge columns is possible quickly with the prepared bridge column optimization tool. For this tool, 14630 different reinforced concrete column sections were collected in the dataset. The loads acting on the bridge columns, displacement demands and various bridge parameters are given by the user as input to the program, and under these demands, the most economical column in the dataset

is determined. Within the scope of the study, 11 actual bridges were examined and more economical columns were designed with the proposed optimization tool.

Keywords: Bridge, Column, Optimization, Seismic Design, Optimum Design

ÖZ

STANDART KARAYOLU KÖPRÜLERİ İÇİN BETONARME KOLONLARININ EN EKONOMİK TASARIMI

Orak, Celil
Yüksek Lisans, İnşaat Mühendisliği
Tez Yöneticisi: Prof. Dr. Barış Binici

Şubat 2022, 108 sayfa

Türkiye'de ve dünyada köprü maliyeti ulaştırma projelerinin en önemli maliyet kalemleri arasında yer almaktadır. Köprü mühendisliğinde köprü üst yapıları uzun yıllara dayanan tecrübelerle optimize edilerek tasarlanmaktadır. Fakat aynı durum altyapı elemanı olan kolonlar için geçerli değildir. Köprü kolonları hem ülkemizde hem dünyada yapısal tasarım açısından değerlendirildiğinde "aşırı tasarım" elemanlardır ve optimize edilmeye müsaittir. Köprü kolon maliyetlerinin toplam köprü maliyetlerine oranı %10-15 mertebesindedir. Köprü altyapılarında genellikle betonarme kolonlar tercih edilmektedir. Köprü mühendisleri için betonarme kolonların en ekonomik tasarımı, deneme yanılma yöntemiyle mümkündür ve söz konusu en ekonomik tasarıma ulaşma oldukça zaman gerektiren bir çalışmadır. Bu tez çalışmasında hazırlanan köprü kolonu eniyileme aracıyla standart karayolu köprü kolonlarının daha ekonomik tasarımının hızlı şekilde mümkün olacağı gösterilmektedir. Bu araç için 14630 adet farklı betonarme kolon kesiti veri havuzunda toplanmıştır. Kullanıcı tarafından köprü kolonlarına etkiyen yükler, yer değiştirme talepleri ve çeşitli köprü parametreleri programa girdi olarak verilmekte ve bu talepler altında veri seti havuzundaki en ekonomik kolon çıktı olarak

alınabilmektedir. Çalışma kapsamında 11 adet mevcut köprü yapısı incelenmiş ve önerilen eniyileme aracı ile daha ekonomik kolonlar tasarlanmıştır.

Anahtar Kelimeler: Köprü, Kolon, Eniyileme, Sismik tasarım, En Ekonomik Tasarım

To my grandmother and grandfather in heaven

Gülbahar Karabay and Yusuf Karabay

ACKNOWLEDGMENTS

I would like to extend my deepest respect and thanks to my advisor, Prof. Dr. Barış Binici, for the guidance and support he has shown me during my studies.

I would also like to express my sincere thanks to Prof. Dr. Yalın Arıcı because he has helped me a lot to focus on my thesis work with the moral support he has given me for a long time.

I would also like to thank the other thesis examining committee members, Prof. Dr. Kağan Tuncay, Prof. Dr. Erdem Canbay and Doc. Dr. Alper Aldemir for their insights and valuable suggestions.

I thank Lana Todorovic, Furkan Pacarizi and Tareq Rabaia for their support. Their contributions to my motivation is undeniable.

I also thank Zeynep Gürakın who has always been there for me, giving me support and encouragement.

I am thankful to my grandmother, Habibe Orak who always included me in her prayers.

Finally, I wish to express my most profound appreciation to the most special person in my life, my mother Nurdagül Orak. She has always been by my side unconditionally and supported my success with her prayers. I believe she deserves this diploma more than me and I dedicate it to her.

TABLE OF CONTENTS

ABSTRACT v

ÖZ vii

ACKNOWLEDGMENTS x

TABLE OF CONTENTS xi

LIST OF TABLES xiii

LIST OF FIGURES xiv

1 INTRODUCTION 1

1.1 General Bridge Design in Turkey 1

1.2 Design Based on AASHTO 2

1.2.1 Bridge Classification for Seismic Analysis 6

1.2.2 Response Spectrum Analysis 8

1.2.3 P-Δ Requirements for Column 9

1.2.4 Design of a Bridge Column 10

1.3 Design Based on Turkish Bridge Earthquake Specification (TBES) 14

1.4 Literature Review 20

1.5 Objective and Scope 22

2 BRIDGE COLUMN DESIGN OPTIMIZATION 25

2.1 Introduction of Algorithm 25

2.2 Database of Pier Section Designs 30

2.3 Assumptions in the Optimizer Tool 34

2.4 Verification of the Interaction Surface 37
2.4.1 Definitions and Assumptions Behind the P-M-M calculations 37
3 CASE STUDY BRIDGES 45
3.1 Introduction 45
3.2 Results of Case Study Optimization 58
4 EXPECTED SEISMIC PERFORMANCE OF OPTIMIZED BRIDGES 73
4.1 Introduction 73
4.2 Calculations and Results of Performance Analysis 74
4.3 Performance Under Service Level Earthquake 80
5 COMPARISON OF RESULTS 83
5.1 Results of Scenario 1 83
5.2 Results of Scenario 2 90
6 CONCLUSIONS 99
REFERENCES 105

LIST OF TABLES

TABLES

Table 1-1 Governing Combinations for Column Design according to AASHTO LRFD 2
Table 1-2 Seismic Zone Definition (AASHTO LRFD 3.10.6) 7
Table 1-3 Minimum Analysis Requirements for Seismic Effects (AASHTO LRFD 4.7.4.3) 7
Table 1-4 Regular Bridge Requirements (AASHTO LRFD 4.7.4.3) 7
Table 1-5 Response Modification Factors (AASHTO LRFD 3.10.7.1) 9
Table 1-6 Earthquake Design Class (Table 3.1 TBES) 15
Table 1-7 Bridge Importance Class (3.2 TBES) 15
Table 1-8 Bridge Calculation and Evaluation Method under EQ (Table 3.3 TBES) 16
Table 1-9 Bridge Performance Target (Table 3.2 TBES) 17
Table 1-10 Strain limits for performance (TBES 5.6.1) 18
Table 2-1 Minimum and maximum spacing of longitudinal reinforcements (AASHTO LRFD 5.10.3.1) 31
Table 2-2 Lap splice and hook bending length (C30&S420) 36
Table 2-3 Errors of Mx-My Interaction 44
Table 4-1 Parameters for confined concrete model 75
Table 4-2 Predicted crack width for selected bridges under service level earthquake 81
Table 5-1 Scenario 1 Cost Comparison 89
Table 5-2 Scenario 2 Cost Comparison 97
Table 6-1 Cost Comparison between tool and drawing results 101

LIST OF FIGURES

FIGURES

Figure 1-1(a) End-restrained columns; (b) pin-ended columns 5
Figure 1-2 Design steps of longitudinal reinforcements 11
Figure 1-3 Design steps of transverse reinforcements 12
Figure 1-4 Plastic hinging mechanism for multiple column 13
Figure 2-1 Workflow process of optimizer tool 26
Figure 2-2 Cost minimization tool user interface for inputs 27
Figure 2-3 Shape distribution of sections; Left: rebar layout is not considered, Right: rebar layout is considered 30
Figure 2-4 Distribution of longitudinal rebar ratios of circular sections 31
Figure 2-5 Distribution of rebar ratios on rectangular section 32
Figure 2-6 Definition of dimensions for SCS 32
Figure 2-7 Distribution of rebar ratios on semi-circular sections 33
Figure 2-8 Distribution of rebar ratios on hollow sections 33
Figure 2-9 Bending length details of rebars 36
Figure 2-10 Variation of Φ with the tensile strain for rebars (Fy=420) 39
Figure 2-11 Section RS-1 with 1.528% rebar ratio 40
Figure 2-12 Section RS-2 with 1.126% rebar ratio 40
Figure 2-13 Section HS-1 with 2.135% rebar ratio 41
Figure 2-14 Section HS-2 with 1.144% rebar ratio 41
Figure 2-15 Section SCS-1 with 1.180% rebar ratio 42
Figure 2-16 Section SCS-2 with 1.200% rebar ratio 42
Figure 2-17 Section CS-1 with 1.220% rebar ratio 43
Figure 2-18 Section CS-2 with 1.024% rebar ratio 43
Figure 2-19 Area Errors According to SpColumn 44
Figure 3-1 Ticket of Bridge 1 47
Figure 3-2 Ticket of Bridge 2 48
Figure 3-3 Ticket of Bridge 3 49

Figure 3-4 Ticket of Bridge 4 50
Figure 3-5 Ticket of Bridge 5 51
Figure 3-6 Ticket of Bridge 6 52
Figure 3-7 Ticket of Bridge 7 53
Figure 3-8 Ticket of Bridge 8 54
Figure 3-9 Ticket of Bridge 9 55
Figure 3-10 Ticket of Bridge 10 56
Figure 3-11 Ticket of Bridge 11 57
Figure 3-12 Optimized Column Result of Bridge 1 58
Figure 3-13 Drawing details of optimized columns for Bridge 1 59
Figure 3-14 Column detail drawings of optimized Column for Bridge 1 59
Figure 3-15 Scenario 1, Bridge 1 Optimum Cost is 1181642 TL 61
Figure 3-16 Scenario 1, Bridge 2 Optimum Cost is 38521 TL 62
Figure 3-17 Scenario 1, Bridge 3 Optimum Cost is 448678 TL 62
Figure 3-18 Scenario 1, Bridge 4 Optimum Cost is 1275783 TL 63
Figure 3-19 Scenario 1, Bridge 5 Optimum Cost is 1385004 TL 63
Figure 3-20 Scenario 1, Bridge 6 Optimum Cost is 490652 TL 64
Figure 3-21 Scenario 1, Bridge 7 Optimum Cost is 1180088 TL 64
Figure 3-22 Scenario 1, Bridge 8 Optimum Cost is 497269 TL 65
Figure 3-23 Scenario 1, Bridge 9 Optimum Cost is 417269 TL 65
Figure 3-24 Scenario 1, Bridge 10 Optimum Cost is 27118 TL 66
Figure 3-25 Scenario 1, Bridge 11 Optimum Cost is 2231606 TL 66
Figure 3-26 Scenario 2, Bridge 1 Optimum Cost is 1181642 TL 67
Figure 3-27 Scenario 2, Bridge 2 Optimum Cost is 38521 TL 67
Figure 3-28 Scenario 2, Bridge 3 Optimum Cost is 448678 TL 68
Figure 3-29 Scenario 2, Bridge 4 Optimum Cost is 3530443 TL 68
Figure 3-30 Scenario 2, Bridge 5 Optimum Cost is 1709730 TL 69
Figure 3-31 Scenario 2, Bridge 6 Optimum Cost is 1322984 TL 69
Figure 3-32 Scenario 2, Bridge 7 Optimum Cost is 1312184 TL 70
Figure 3-33 Scenario 2, Bridge 8 Optimum Cost is 1137155 TL 70

Figure 3-34 Scenario 2, Bridge 9 Optimum Cost is 1108489 TL 71
Figure 3-35 Scenario 2, Bridge 10 Optimum Cost is 41869 TL 71
Figure 3-36 Scenario 2, Bridge 11 Optimum Cost is 2231606 TL 72
Figure 4-1 Bridge 8 original column geometry and rebar layout 74
Figure 4-2 P-M_x & P-M_y of Bridge 8 original column 75
Figure 4-3 Mx-Φ of Bridge 8 original column (indicators show ratio of axial to dead load) 75
Figure 4-4 My-Φ of Bridge 8 original column (indicators show ratio of axial to dead load) 76
Figure 4-5 Base shear and column tip deflection graph in longitudinal direction for Bridge 8 77
Figure 4-6 Base shear and column tip deflection graph in transverse direction for Bridge 8 77
Figure 4-7 Base shear and column tip deflection graph in long. direction for Bridge 10 78
Figure 4-8 Base shear and column tip deflection graph in transverse direction for Bridge 10 78
Figure 4-9 Base shear and column tip deflection graph in long. direction for Bridge 11 79
Figure 4-10 Base shear and column tip deflection graph in transverse direction for Bridge 11 79
Figure 5-1 Comparison of as built and optimum column for bridge 1 scenario 1 ..84
Figure 5-2 Comparison of as built and optimum column for bridge 2 scenario 1 ..84
Figure 5-3 Comparison of as built and optimum column for bridge 3 scenario 1 ..85
Figure 5-4 Comparison of as built and optimum column for bridge 4 scenario 1 ..85
Figure 5-5 Comparison of as built and optimum column for bridge 5 scenario 1 ..86
Figure 5-6 Comparison of as built and optimum column for bridge 6 scenario 1 ..86
Figure 5-7 Comparison of as built and optimum column for bridge 7 scenario 1 ..87
Figure 5-8 Comparison of as built and optimum column for bridge 8 scenario 1 ..87
Figure 5-9 Comparison of as built and optimum column for bridge 9 scenario 1 ..88

Figure 5-10 Comparison of as built and optimum column for bridge 10 scenario 1 88
Figure 5-11 Comparison of as built and optimum column for bridge 11 scenario 1 89
Figure 5-12 Normalized Cost Comparison for Scenario 1 90
Figure 5-13 Comparison of as built and optimum column for bridge 1 scenario 2 91
Figure 5-14 Comparison of as built and optimum column for bridge 2 scenario 2 92
Figure 5-15 Comparison of as built and optimum column for bridge 3 scenario 2 92
Figure 5-16 Comparison of as built and optimum column for bridge 4 scenario 2 93
Figure 5-17 Comparison of as built and optimum column for bridge 5 scenario 2 93
Figure 5-18 Comparison of as built and optimum column for bridge 6 scenario 2 94
Figure 5-19 Comparison of as built and optimum column for bridge 7 scenario 2 94
Figure 5-20 Comparison of as built and optimum column for bridge 8 scenario 2 95
Figure 5-21 Comparison of as built and optimum column for bridge 9 scenario 2 95
Figure 5-22 Comparison of as built and optimum column for bridge 10 scenario 2 96
Figure 5-23 Comparison of as built and optimum column for bridge 11 scenario 2 96
Figure 5-24 Normalized Cost Comparison for Scenario 2 97
Figure 6-1 Drawing cost and tool cost comparison for Scenario 1..... 102
Figure 6-2 Drawing cost and tool cost comparison for Scenario 2..... 102

CHAPTER 1

INTRODUCTION

Bridges have been the most important focus of civil engineering for centuries. Aside from their functional role, they form crucial symbols and landmarks for the region they are built in. The key purpose of bridges is connecting two locations and serving as lifelines for the transportation infrastructure. Since they are of vital importance due to the needs of society, they should be designed to be safe under extreme effects. Bridges are expensive investments along with the tunnels among the civil engineering highway projects. Economically designed bridges and viaducts are important in reducing the cost of public transportation. In the upcoming sections of this study, cost details will be presented for typical bridges, after a brief introduction to bridge design in the next sections.

1.1 General Bridge Design in Turkey

Bridges differ from buildings as they are designed to accommodate unique design specifications. With the introduction of the Turkish Bridge Earthquake Specification (2020), Turkish bridge engineers were provided with the local bridge design code. In the past, standard highway bridges in Turkey were designed according to the AASHTO, American standards. AASHTO design is based on a load and resistance factor approach for the standard highway bridges. However, the new Turkish bridge specification includes load and resistance factor design as the primary design approach and prescribes performance based design for more detailed evaluation. Although there are large similarities in the principles used in the two specifications,

there are also some differences. The standard highway bridge design according to these two specifications will be briefly described below.

1.2 Design Based on AASHTO

In the preliminary design, the initial dimensions of the substructures and superstructures are determined based on past experience complying with the geographical constraints Bridges are analyzed with these initial dimensions under the required loads to calculate the internal force and deformation demands. Following the load and resistance factor approach the resistance is adjusted through reinforcement amount such that it is larger than the demands. This applies to both substructures and superstructures i.e. girders, piers, foundations, piles, abutments, cap beams, etc. This thesis focuses on bridge pier design and the design method discussed hereafter is particular to reinforced concrete(RC) bridge columns.

RC bridge column internal force demands are axial loads, moments and shear forces in two perpendicular directions. These demands are calculated according to the load combinations given in Table 1-1.

Table 1-1 Governing Combinations for Column Design according to AASHTO LRFD

	Dead Load	Live Load	EQx	EQy
Strength I	1.25	1.75	0.00	0.00
Strength IV	1.50	0.00	0.00	0.00
Extreme Event 1a	1.25	0.50	±1.00	±0.30
Extreme Event 1b	1.25	0.50	±0.30	±1.00
Extreme Event 1c	0.90	0.50	±1.00	±0.30
Extreme Event 1d	0.90	0.50	±0.30	±1.00

In column design slenderness effect of column must be taken into consideration, AASHTO proposes an approximate method for slenderness effect. It is assumed that;

$$\frac{K * l_u}{r} < 22 \rightarrow slenderness\ can\ be\ neglected \quad (1.1a)$$

$$22 > \frac{K * l_u}{r} > 100 \rightarrow moment\ magnification\ factor\ will\ be\ used \quad (1.1b)$$

$$\frac{K * l_u}{r} > 100 \rightarrow out\ of\ scope\ of\ this\ thesis \quad (1.1c)$$

where,

K= effective length factor

l_u= unsupported length of column

r= radius of gyration

Factored moments should be increased according to the following equation:

$$M_c = \delta_b * M_{2b} + \delta_s * M_{2s} \quad (1.2)$$

where,

M_{2b}=Moment on column due to factored gravity loads that result in no appreciable sidesway calculated by first-order elastic frame analysis

M_{2s}=Moment on column due to factored lateral or gravity loads that result in sidesway calculated by first-order elastic frame analysis

$$\delta_b = \frac{C_m}{1 - \frac{P_u}{\emptyset_K * P_e}} \geq 1.0 \quad (1.3a)$$

$$\delta_s = \frac{1}{1 - \frac{\sum P_u}{\emptyset_K * \sum P_e}} \geq 1.0 \quad (1.3b)$$

where,

$\emptyset_K$=0.75 for concrete columns

P_u=factored axial load

$$C_m = 0.6 + 0.4 * \frac{M_{1b}}{M_{2b}} \ (for\ column\ braced\ against\ sidesway) \quad (1.4)$$

$$C_m = 1 \ (for\ other\ cases)$$

where,

M_{1b}, M_{2b}=smaller and larger end moments respectively

$$P_e = \frac{\pi^2 * EI}{(K * l_u)^2} \quad (1.5)$$

Where,

$$EI = max\left(\frac{\frac{E_c * I_g}{5} + E_s * I_s}{1 + \beta_d}, \frac{\frac{E_c * I_g}{2.5}}{1 + \beta_d}\right) \quad (1.6)$$

β_d=ratio between factored permanent load moment and factored total moment (must be positive)

Effective length factor 'K' has an important role in column design, Mathematically, it is defined with the equation given below.

$$K = \sqrt{\frac{P_e}{P_{cr}}} = \sqrt{\frac{\pi^2 * EI}{L^2 * P_{cr}}} \quad (1.7)$$

Where P_e is Euler elastic buckling load of a pin-ended column, P_{cr} is elastic buckling of an end-restrained column. End-restrained and pin-ended column illustrations are shown in Figure 1-1.

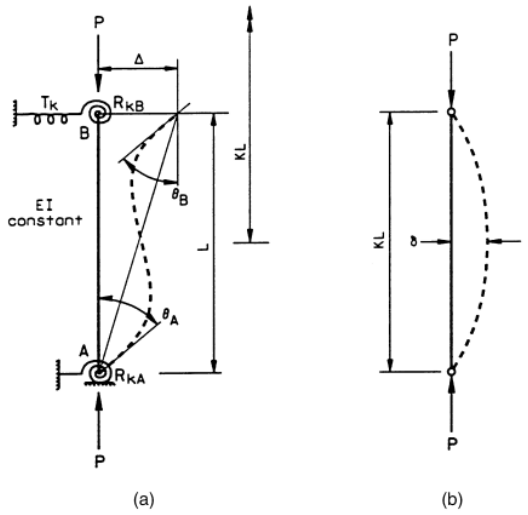

Figure 1-1(a) End-restrained columns; (b) pin-ended columns

K is a factor that, when multiplied by actual column length of end-restrained column, gives the length of equivalent pin-ended column.

AASHTO recommends two different formulations for braced and unbraced frames, to obtain K value needed to calculate G values for both end.

For braced columns K is obtained by solving the following equation:

$$\frac{G_a G_b}{4}\left(\frac{\pi}{K}\right)^2 + \frac{G_a G_b}{2}\left(1 - \frac{\frac{\pi}{K}}{\tan\left(\frac{\pi}{K}\right)}\right) + \frac{2\tan\left(\frac{\pi}{2K}\right)}{\frac{\pi}{K}} = 1 \quad (1.8)^1$$

For unbraced columns the form of the nonlinear equation is as follows:

$$\frac{G_a G_b\left(\frac{\pi}{K}\right)^2 - 36}{6(G_a + G_b)} = \frac{\frac{\pi}{K}}{\tan\left(\frac{\pi}{K}\right)} \quad (1.9)$$

[1] Sub c refers column members and sub g refers to restraining members
Sub a refers to top of column end sub b refers to bottom of column end

In which:

$$G = \frac{\sum(\frac{E_c I_c}{L_c})}{\sum(\frac{E_g I_g}{L_g})} \quad (1.10)$$

These above formulation assumes only elastic action and all columns will buckle in an elastic manner.

While AASHTO suggests calculating the G factor for column and cap beam connection, the G factors for the column and foundation connection are given based on soil and foundation type.

- G=1.5 → footing anchor on rock
- G=3 → footing not anchor on rock
- G=5 → footing on soil
- G=1 → footing on multiple rows of end bearing piles

It is also possible to use standard alignment charts to compute effective length factors both for braced and unbraced columns.

1.2.1 Bridge Classification for Seismic Analysis

AASHTO divides bridges into three main categories according to importance class

- Critical Bridges
- Essential Bridges
- Other Bridges

Most standard highway bridges are involved in the other bridges category. This thesis study covers only essential and other bridges according to AASHTO.

According to horizontal response spectrum acceleration coefficient (S_{d1}), bridges are categorized into four seismic zones as shown in the Table 1-2. Bridge importance categories and seismic zone categories define the minimum required analysis to

calculate the earthquake demand according to AASHTO LRFD 4.7.4.3. Minimum requirements of analysis according to AASHTO is given in Table 1.3 according to regular or irregular bridge definition. The requirement for regular bridge is described in Table 1-4

Table 1-2 Seismic Zone Definition (AASHTO LRFD 3.10.6)

Acceleration Coefficient, S_{D1}	Seismic Zone
$S_{D1} \leq 0.15$	1
$0.15 < S_{D1} \leq 0.30$	2
$0.30 < S_{D1} \leq 0.50$	3
$0.50 < S_{D1}$	4

Table 1-3 Minimum Analysis Requirements for Seismic Effects (AASHTO LRFD 4.7.4.3)

Seismic Zone	Single-Span Bridges	Multispan Bridges					
		Other Bridges		Essential Bridges		Critical Bridges	
		regular	irregular	regular	irregular	regular	irregular
1	No seismic analysis required	*	*	*	*	*	*
2		SM/UL	SM	SM/UL	MM	MM	MM
3		SM/UL	MM	MM	MM	MM	TH
4		SM/UL	MM	MM	MM	TH	TH

[2]

Table 1-4 Regular Bridge Requirements (AASHTO LRFD 4.7.4.3)

Parameter	Value				
Number of Spans	2	3	4	5	6
Maximum subtended angle for a curved bridge	90°	90°	90°	90°	90°
Maximum span length ratio from span to span	3	2	2	1.5	1.5
Maximum bent/pier stiffness ratio from span to span, excluding abutments	—	4	4	3	2

The bridges satisfying the requirements of Table 1-4 may be taken as regular bridges.

According to Table 1-3, all bridges can be analyzed with multimode elastic response spectrum except critical bridges which is out of scope of this thesis.

[2] *= No seismic analysis required; UL= uniform load elastic method; SM= single mode elastic method; MM= multi-mode elastic method; TH= time history method

1.2.2 Response Spectrum Analysis

The modal spectrum analysis is an effective tool to calculate the dynamic response of complex structures which are exposed to earthquake excitations. This method is simple yet conservative to calculate seismic demands for structures with irregularities. These irregularities cause coupling in three orthogonal directions for each mode of vibration. For standard highway bridges, several modes of vibration contribute to the complete response of bridges. A multimode spectral analysis is usually done by modelling the bridge structure consisting of three-dimensional frame elements with structural mass lumped at various locations to represent the vibration modes of components. To obtain reasonable response, mass participation of each directions should be at least 90%. This analysis is usually performed with computer program such as SAP2000, LARSA4D, Midas Civil or RM Bridge in the engineering practice of Turkey.

Multiple mode elastic method is sufficient to estimate the behavior of multiple span non-critical bridges for earthquake loads according to AASHTO LRFD 4.7.4.3.1. Elastic seismic response spectrum shall be used for each mode. The member forces and displacement can be estimated by combining results for each mode. Complete quadratic combination (CQC) or squares method (SRSS) should be used according to AASHTO LRFD 4.7.4.3.3. Response spectrum parameters such as PGA, S_{ds}, S_{d1} must be determined according to local soil parameters and the selected return period. Bridges are generally designed for 475, 1000 or 2475 year return periods depending on their importance and owner's request.

In elastic multiple mode analysis column bending inertias are decreased by %50 to consider cracking of piers under lateral loads. Response modification factor, R for bridge column must be taken into consideration for reducing the earthquake demands. Column bending moment in both directions are divided by R factor defined in AASHTO LRFD 3.10.7.1-1 Table 1-5. R factor for column shear design must be taken as 1 based on AASHTO LRFD 3.10.9.4.3d.

Table 1-5 Response Modification Factors (AASHTO LRFD 3.10.7.1)

Substructure	Importance Category		
	Critical	Essential	Other
Wall-type piers—larger dimension	1.5	1.5	2.0
Reinforced concrete pile bents			
• Vertical piles only	1.5	2.0	3.0
• With batter piles	1.5	1.5	2.0
Single columns	1.5	2.0	3.0
Steel or composite steel and concrete pile bents			
• Vertical pile only	1.5	3.5	5.0
• With batter piles	1.5	2.0	3.0
Multiple column bents	1.5	3.5	5.0

Standard highway bridges are defined in the other importance category. Column R factor is assumed 3 if it is a single pier and 5 for a multi-span system. These factors are only applicable for bending demands, not for shear and axial loads. According to AASHTO LRFD, aspect ratio (ratio of column height to maximum plan dimensions) should be larger than 2.5 to be considered as a bridge column. Otherwise it should be considered as wall-type pier with different R factors.

1.2.3 P-Δ Requirements for Column

The displacement of any column or pier in the longitudinal or transverse direction shall satisfy the following according to AASHTO LRFD 4.7.4.5:

$$\Delta P_u < 0.25\ \emptyset\ M_n \quad (1.11)$$

In which;

$$\Delta = R_d\ \Delta_e \quad (1.12)$$

- If $T<1.25*T_s$

$$R_d = \left(1 - \frac{1}{R}\right)\frac{1.25T_s}{T} + \frac{1}{R} \quad (1.13)$$

- If $T \geq 1.25*T_s$

$$R_d = 1$$

where;

Δe = column tip displacement calculated from elastic seismic analysis

T = period of fundamental mode, T_s = corner period

R = R factor specified in Table 1-5

P_u = axial load on column

Φ = flexural resistance factor for column

M_n = nominal flexural strength of column

This formula can be converted to

$$4\Delta P_u < \emptyset M_n \quad (1.14)$$

$4x\Delta xP_u$ can be named as P-Δ demand due to the seismic forces.

As stated in AASHTO LRFD 2012 C4.7.4.5, bridges subject to earthquake ground motion may be susceptible to instability due to P-Δ effects. Inadequate strength can result in ratcheting of structural displacements to larger and larger values causing excessive ductility demand on plastic hinges in the columns, large residual deformations, and possibly collapse. The maximum value for Δ given is intended to limit the displacements such that P-Δ effects will not significantly affect the response of the bridge during an earthquake.

1.2.4 Design of a Bridge Column

In this part with the help of the above explanation, steps of pier design will be summarized. Bridge columns are designed in two main steps which are coupled.

- Design of longitudinal reinforcement
- Designing of transverse reinforcement

The design flow chart for both cases are given in the Figure 1-2 and Figure 1-3.

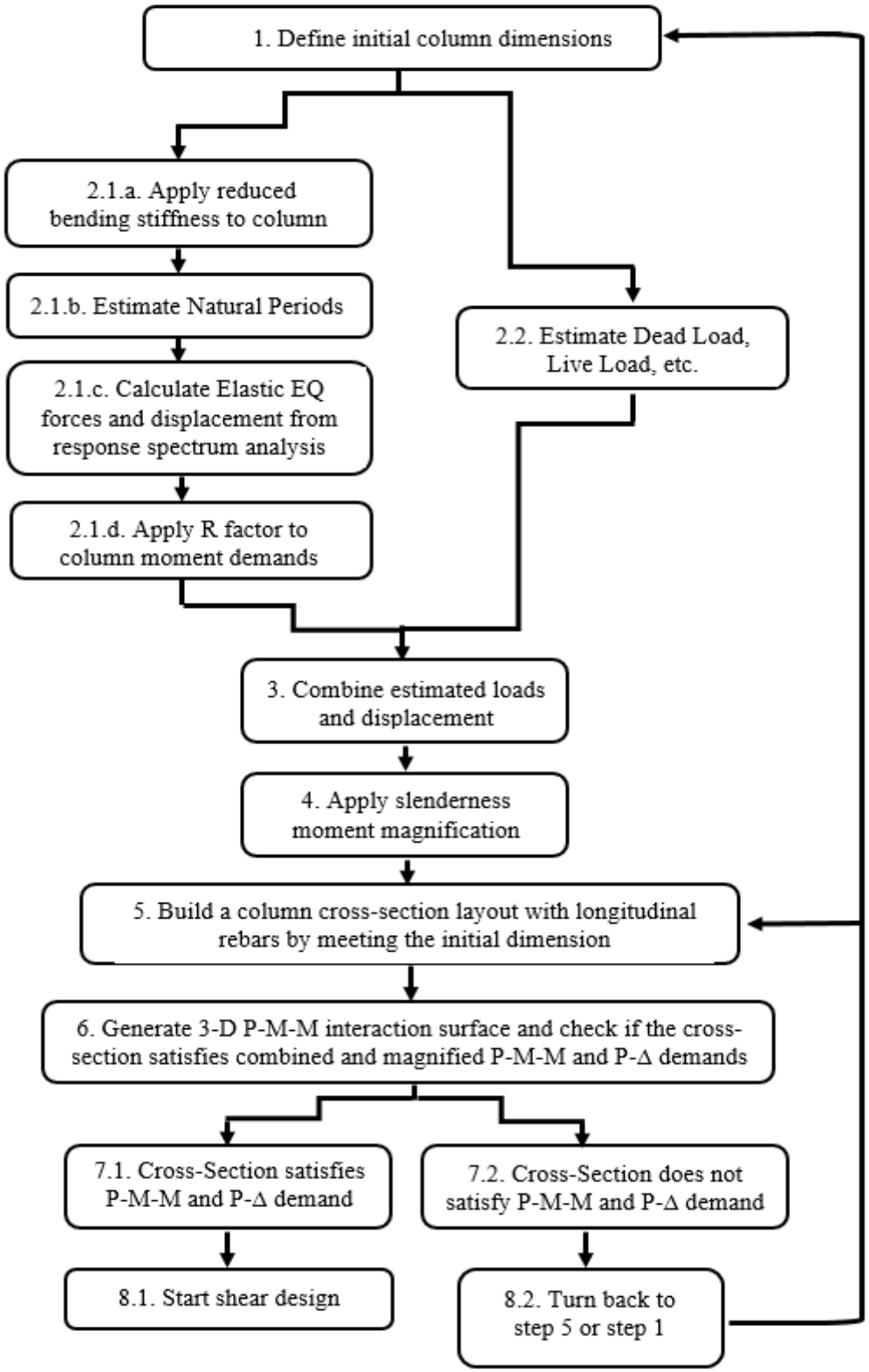

Figure 1-2 Design steps of longitudinal reinforcements

According to Figure 1-2, the steps are followed and when the step 8.1 is reached shear reinforcement design of bridge column starts. The flow chart of shear design is given in Figure 1-3.

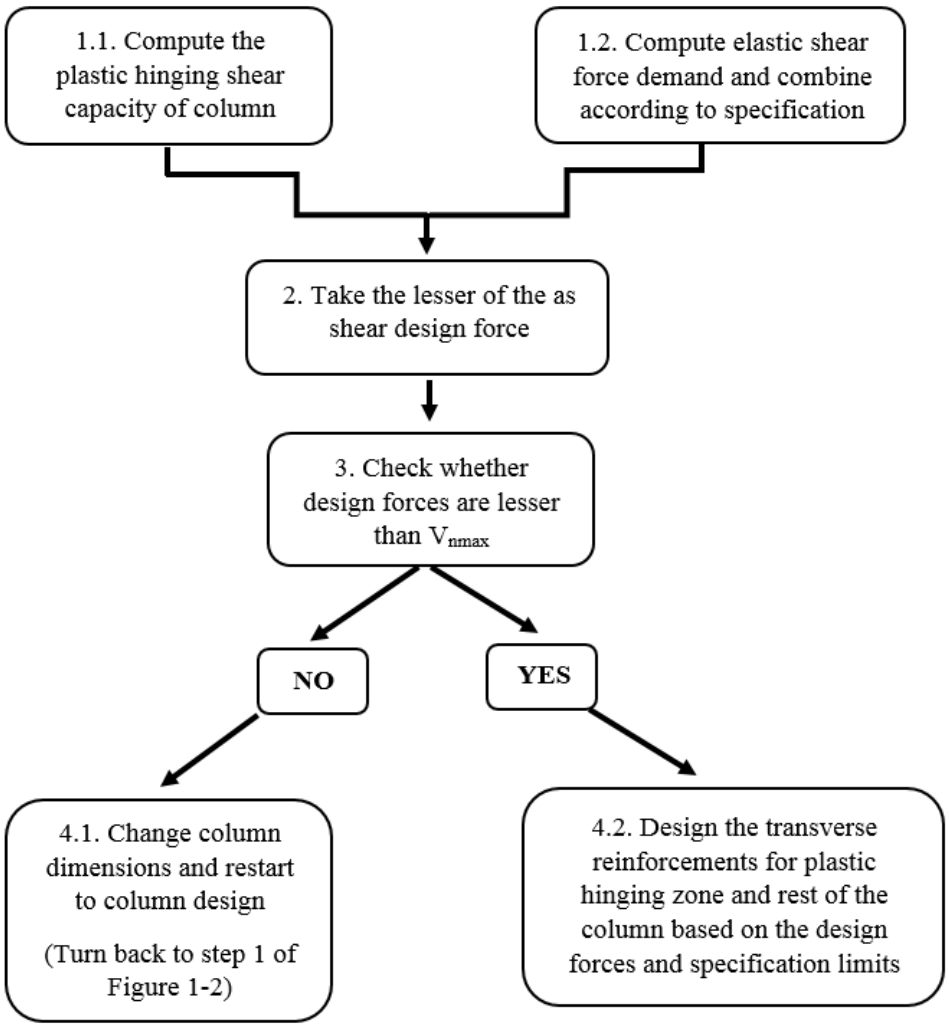

Figure 1-3 Design steps of transverse reinforcements

Shear design forces are the lesser of either the elastic forces calculated at step 3 in Figure 1-2 or plastic hinging shear capacity of column. Column shear reinforcement are designed according to those loads. Plastic hinging region and rest of column should also satisfy the AASHTO requirements. Above all, determined section maximum shear resistance, V_{nmax} which is defined in AASHTO LRFD 5.8.3.3-2, should be larger than column shear design forces, otherwise, dimensions of column

must be changed and should be started from step 1 in Figure 1-3. Then, shear design of the column is finalized according to specification. Plastic hinging shear capacity of column is determined according to AASHTO LRFD 3.10.9.4.3.

Plastic hinging capacity calculations are incorporated in the following steps for single and multi column piers.

For single column;

Axial Forces: Those determined at step 3 at Figure 1-3.

Moments: Magnified moment capacity with over strength factor of 1.3 under representative axial loads for column.

Shear: Calculated directly from the plastic moment capacity of column

For multiple columns; Mechanism is illustrated in Figure 1-4.

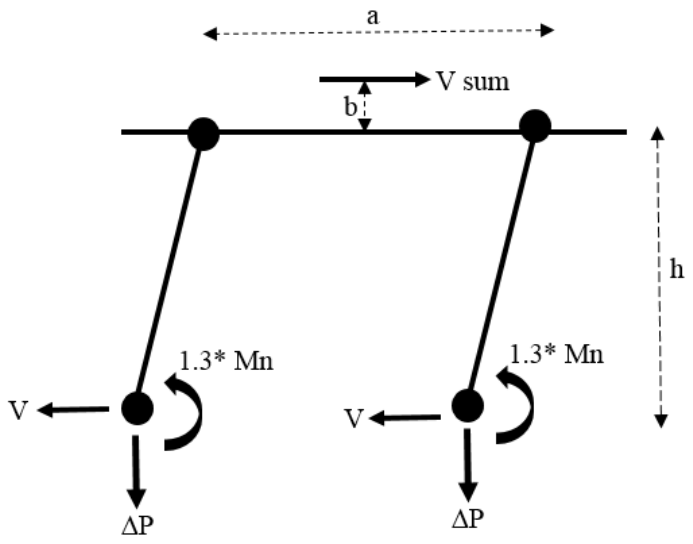

Figure 1-4 Plastic hinging mechanism for multiple column

a= distance between columns

b= distance between superstructure center and column top

h= column height

$$V = \frac{2 * 1.3 * M_n}{h} \quad (1.15)$$

$$\Delta P = \frac{[\sum V * H - \sum(1.3 * M_n)]}{a} \quad (1.16)$$

where; H=h+b

Step 1: Calculate M_n according to Axial load for each column

Step 2: Calculate shear from formula 1

Step 3: Determine ΔP from formula 2

Step 4: Revise axial load by adding ΔP

Step 5: Follow same procedure with new axial loads, stop when Vsum difference between two iterations is smaller than 10%

At the final iteration, column plastic hinge capacities can be determined.

1.3 Design Based on Turkish Bridge Earthquake Specification (TBES)

In this section, the design principles of Turkey Bridge Earthquake specification will be explained. The load and capacity design is similar to the AASHTO described in the previous section, but there are fundamental differences between these two specifications. In addition to the capacity design, there are seismic performance targets in TBES. In this specification, there is a two-stage design requirement for earthquake design. Bridges are categorized according to earthquake design classes and importance classes. Two stage design requirement will be explained shortly but first, bridge categorization needs to be examined. Table 1-6 presents the earthquake design classes and Table 1-7 presents bridge importance categories. These classes and categories are required to determine analysis methods and to define earthquake return periods required to be taken into consideration.

Table 1-6 Earthquake Design Class (Table 3.1 TBES)

DD-2 Short Period Design Spectral Acceleration Coefficient (S_{ds})	Earthquake Design Class
$S_{ds}<0.33$	DTS=4
$0.33\leq S_{ds}<0.67$	DTS=3
$0.67\leq S_{ds}<1.00$	DTS=2
$1.00\leq S_{ds}$	DTS=1

DD-2 = earthquake ground motion level with a recurrence period of 475 years

Table 1-7 Bridge Importance Class (3.2 TBES)

KÖS:1	Strategic and Important Bridges
KÖS:2	Normal Bridges
KÖS:3	Simple Bridges

In addition to these two categories, the load carrying system behavior is divided into critical and non-critical bridges. Most of the standard highway bridges can generally be qualified as critical by definition in the specification. In this context, the calculation methods determined according to the specification according to the classification details for critical bridges are given in the Table 1-8

Table 1-8 Bridge Calculation and Evaluation Method under EQ (Table 3.3 TBES)

Bridge Importance Class	Steps	EQ Ground Motion	EQ Design Class		
			DTS=1	DTS=2,3	DTS=4
KÖS=1	First Step	DD-2a	Linear Calculation (Load Capacity Evaluation)	Linear Calculation (Load Capacity Evaluation)	Linear Calculation (Load Capacity Evaluation)
	Second Step	DD-1	Non-Linear (THA) /Strain Evaluation	Non-Linear (MA) /Strain Evaluation	-
KÖS=2	First Step	DD-3	Linear Calculation (Load Capacity Evaluation)	Linear Calculation (Load Capacity Evaluation)	Linear Calculation (Load Capacity Evaluation)
	Second Step	DD-1	Non-Linear (PO) /Strain Evaluation	Non-Linear (MA) /Strain Evaluation	-
KÖS=3	First Step	DD-3	Linear Calculation (Load Capacity Evaluation)	Linear Calculation (Load Capacity Evaluation)	Linear Calculation (Load Capacity Evaluation)

[3]

The performance limits of the bridge, whose analysis and calculation method is determined according to the Table 1-8 above, are also specified according to the ground motion level and the importance class of the bridge from the Table 1-9 below.

According to Sethy (2011), pushover analysis is mainly used to estimate the strength and drift capacity of structure and the seismic demand of the structure subjected to the earthquake. The effectiveness of pushover analysis and its computational simplicity brought this procedure in to several seismic guidelines. Pushover analysis is defined as an analysis wherein a mathematical model directly incorporating the nonlinear load-deformation characteristics of individual components and elements

[3] DD-1= earthquake ground motion level with a recurrence period of 2475 years
DD-2= earthquake ground motion level with a recurrence period of 144 years
DD-3= earthquake ground motion level with a recurrence period of 72 years
THA= Time History Analysis
PO= Pushover Analysis
MA= Mixed Analysis (kind of Pushover)

of the structure shall be subjected to monotonically increasing lateral loads representing inertia forces in an earthquake until a 'target displacement' is exceeded.

Time history analysis is an important technique for structural seismic analysis especially when the evaluated structural response is nonlinear. Time history analysis is used to determine the seismic response of a structure under dynamic loading of a representative earthquake. The structure is evaluated in a step by step analysis for dynamic loading that varies with time.

Under the required analysis method determined according to Table 1-8, the bridge must satisfy the performance targets given in Table 1-9.

Table 1-9 Bridge Performance Target (Table 3.2 TBES)

EQ Ground Motion Level	Bridge Importance Class		
	KÖS=1	KÖS=2	KÖS=3
DD-3	-	KK	KK
DD-2a	KK	-	-
DD-1	KH	GÖ	-

[4]

As can be understood from the bridge classification methods and ground motion levels, according to TBES, bridges are designed linearly according to the earthquake levels that are encountered more frequently and are redesigned with nonlinear methods according to the earthquake ground motion levels that will be encountered less frequently.

In AASHTO, the nonlinear method is not required for every bridges. However, the TBES specification includes nonlinear analysis and evaluation according to strain for almost every bridge.

In the first stage linear design in TBES, unlike AASHTO, there is no response modification factor. In addition, in the first stage design, the structural stiffness of

[4] KK= Immediate occupancy; KH= Limited damage; GÖ= Collapse prevention

bridge elements is assumed as the cracked stiffness for seismic calculation. For example, the moment of inertia of columns is reduced by 50%. This can be met naturally due to the low ground motion of the earthquake in the first stage. In the second stage, stiffness is reduced in columns and other elements according to the principles specified in the specification. The reduction for the columns is applied according to the calculated effective inertia. The calculations and performance limit values used in the second order analyzes will be explained below.

While using non-linear methods, plastic hinges are defined with the plastic hinge length calculated according to Equation 1.17 at the column ends to determine column performance. Moment-curvature and moment-axial load interactions of these hinges are calculated by increasing the characteristic material properties of steel and concrete by 1.2 and 1.3, respectively. The concrete confinement effects are taken into account by the Mander method, and the plastic hinge properties are determined accordingly. Using these hinge properties, non-linear analysis of bridge columns can be conducted for seismic situations. Performance limits are computed using strain limits for the most compressed fiber in confined concrete and highest tensile strain in steel reinforcement. The limits are listed in Table 1-10.

$$L_p = 0.08 * L_k + 0.022 * f_{ye} * d_{bl} \geq 0.044 * f_{ye} * d_{bl} \quad (1.17)^5$$

Table 1-10 Strain limits for performance (TBES 5.6.1)

Concrete strain performance limits		Steel strain performance limits	
Limited Damage	Collapse Prevention	Limited Damage	Collapse Prevention
ε_c (KH) ≤ 0.5*ε_{cu}	ε_c (GÖ) ≤ 0.67*ε_{cu}	ε_s (KH) ≤ 0.5*ε_{su}	ε_s (GÖ) ≤ 0.67*ε_{su}
ε_c (KH) ≤ 0.0135	ε_c (GÖ) ≤ 0.018	ε_s (KH) ≤ 0.04	ε_c (GÖ) ≤ 0.053

[5] L_k = Length of column from the point of maximum moment to contra-flexure
f_{ye} = expected yield strength of column longitudinal rebars
d_{bl} = nominal diameter of longitudinal bars

Concrete ultimate strain calculations;

Rectangular Sections

$$\varepsilon_{cu} = 0.0035 + 0.04 * \sqrt{k_e * w_s} \quad (1.18)$$

Circular Sections

$$\varepsilon_{cu} = 0.0035 + 0.07 * \sqrt{k_e * w_s} \quad (1.19)$$

Where;

For rectangular sections

$$k_e = \left(1 - \frac{\sum a_i^2}{6 * b_0 * h_0}\right)\left(1 - \frac{s}{2 * b_0}\right)\left(1 - \frac{s}{2 * h_0}\right)\left(1 - \frac{A_s}{b_0 * h_0}\right) \quad (1.20)$$

For circular sections

$$k_e = \left(1 - \frac{s}{2 * D_0}\right)^2 \left(1 - \frac{A_s}{\pi {D_0}^2/4}\right) \quad (1.21)$$

$$w_s = p_s * \frac{f_{ywe}}{f_{ce}} \quad (1.22)$$

p_s for rectangular section

$$p_s = 2 * \min(p_x, p_y) \quad (1.23)$$

$$p_x = \frac{A_{swx}}{h_0 * s} \quad (1.24)$$

$$p_y = \frac{A_{swx}}{b_0 * s} \quad (1.25)$$

p_s for circular section

$$p_s = \frac{4 * A_{sp}}{D_0 * s} \quad (1.26)$$

The performance based evaluation is conducted with the following steps according to TBES:

1- Conduct non-linear analysis (Pushover or Non-Linear Time History),
2- Compute plastic rotation demands,
3- Compute ultimate curvature,
4- Determine ε_{cmax} and ε_{smax} from M-C analysis,
5- Compute ε_{cu}^{limit} and ε_{s}^{limit} for desired performance target,
6- Compare ε_{cmax} with ε_{cu}^{limit} and ε_{smax} with ε_{s}^{limit},
7- Check if performance target is satisfied,
8- If satisfied stop, otherwise revise design.

1.4 Literature Review

There has been a lot of research on the optimization of the RC structures in the literature. In most of these studies, various optimization algorithms such as genetic algorithms and direct search method algorithm were used. In this section, the prominent studies will be briefly mentioned with the emphasis on the reinforcement optimization in RC sections rather than structural optimization.

Rafiq and Southcombe (1998) studied a new approach to optimal design of reinforced concrete biaxial columns using genetic algorithms. In that study, an algorithm was developed to obtain optimum longitidunal reinforcement layout for given size, axial load and biaxial moment according to British Standard (BS8110) requirements. The aim was to satisfy the demands with minimum longitidunal reinforcement ratio for given cross-section sizes. With the help of the decision support tool developed in this study, designers are able to make decisions to quickly evaluate exact bending capacities of the section satisfying the ultimate limit state requirements. According to the study, the longitudinal reinforcement ratio could be reduced by 20%. Transverse reinforcement design or detailing optimization was not considered.

Singh and Chutani (2015) focused on optimizing reinforced concrete columns using direct search algorithm minimizing the cost for a given axial load and biaxial moments. The cost of a reinforced concrete column was calculated as the sum of the costs of concrete and steel as well as the formwork. The shear reinforcement design was not taken into account. The optimum column cross-section dimension was determined to be dependent on the demand levels. The optimization generally resulted in an increase the column size and reduction of the longitudinal reinforcement.

Verma and Priestley (1993) conducted a study on the optimization of seismic design of single circular reinforced concrete bridge piers. The effect of axial load ratio, column height and design displacement ductility demand on the total cost was investigated following the New Zealand and United States bridge specifications. Concrete and steel material cost and formwork costs were taken into account. As a result of this study, the relationship between the axial load and cost was obtained considering various column lengths. As axial load ratio increased, the total cost decreased for different column lengths. The relationship between the ductility capacity and the total cost were also investigated: the results show that for the acceptance of higher ductility resulted in less cost up to a certain optimal ductility capacity beyond which the costs start increasing. The study proposed optimal ductility capacity and axial load ratio ranges for the specified bridge pier heights.

Malapur et al. (2018) investigated the optimization of RC column and footings using genetic algorithm. The optimization algorithm minimized the total cost by satisfying the constraints, without considering detailing or constructability of the structure (i.e. bar fit, lap splice placement, dimensions that are not rounded etc.). As a pure theoretical study, the proposed tool gives the most economic column and footing designs for the given demands.

Lee et al. (2007) studied the optimum RC column reinforcement design considering multiple load combinations. The design problem was formulated as a general constrained nonlinear optimization problem and was solved both mathematical and

graphically. According to the results of the study, the use of asymmetric reinforcement rather than symmetric distributions of reinforcement can provide lower construction costs. This result was shown with the mathematical approach and the reinforcement sizing graph. Optimization was done only on the amount of longitudinal reinforcement and concrete. Transverse reinforcement or detailing was not considered.

Upon examining the above studies, some peculiar features stand out. Asymmetric reinforcement placement and reinforcement placement of different diameters for longitidunal bars were observed in in some cases. In others, dimension of the columns was not appropriate for construction. These factors make it difficult to use the results of optimization in the actual design. In addition, the reinforcement detailing and joint details were not included in the column optimization calculations. Both of these issues are very important in terms of cost. In most studies, column optimization is conducted by reducing the amount of longitudinal reinforcement for fixed geometries for the demand axial loads and moments. Transverse reinforcement cost which is at least as effective as longitudinal reinforcement on the total cost, were not considered in the total cost calculations

A bridge pier cost optimization study, conducting design in accordance with AASHTO LRFD, while minimizing cost with respect to all reinforcement details and cross-section dimensions is not present in the literature. In the light of the results of this literature review, it was decided to conduct this study, where the scope and objective will be explained in the next section.

1.5 Objective and Scope

While the superstructures of the bridges, which are one of the most expensive structures among the transportation projects, are designed more economically, the infrastructure elements, especially the columns, are usually over-designed. It is known that bridge columns are designed for approximately 10% axial load levels.

The design habits developed by bridge engineers all over the world are in this direction. In an average standard highway bridge, if the bridge columns length is not too short, the ratio of columns' cost to the cost of the whole bridge is around 10-15%. Considering the serious expenditure on bridges, the importance of optimization is obvious.

In this study, a tool for optimizing columns of standard highway bridges is developed. This optimization tool was developed according to the AASHTO LRFD 2012 specification. It is also suitable for the first stage calculations specified in the TBES.

Optimum column is defined as the most economic column among alternatives that satisfy the safety limits according to specification with capacity/demand ratio larger than one. For RC piers determining optimum section with optimum rebars layout is a complex process: It does not have closed form solution. The most economical solution is determined by numerical methods. To calculate optimum bridge column section a MATLAB code was prepared.

In the proposed optimization tool, a database of 14630 column cross-sections was prepared. Instead of conducting numerical optimization, the best selection for the given constraints are sought within this database to optimize the bridge pier. These cross-sections have different geometric properties and different reinforcement arrangements and comply with all the limitations that must be met in the AASHTO LRFD.

The scope of this study was determined according to the column conditions specified in AASHTO. Optimizer tool is applicable to columns with aspect ratio larger than 2.5. In addition, the column slenderness limit of 100 was also applied as the upper limit. In terms of ease of construction and economy, the cap beam is adjusted so that the overhang length does not exceed 4.5 meters. The construction of cap beams with a cantilever length greater than 4.5 meters increases a lot in terms of cost. Column is determined by choosing the most economical one among the database created according to the limits specified above. In addition, all of the sections in the

constructed database have a longitudinal reinforcement ratio between 1% and 4%, and the maximum and minimum spacing between the longitudinal reinforcements placed on these sections has been adjusted according to the specification. In the shear calculation, the longitudinal and transverse spacing for stirrups and hooks are designed in accordance with AASHTO standards.

The optimization procedure is then employed to 11 bridges designed and constructed in Turkey. Critical evaluation regarding the cost and the expected seismic performance are presented based on comparison of the existing drawings and the optimized design in addition to the non-linear analysis results.

CHAPTER 2

BRIDGE COLUMN DESIGN OPTIMIZATION

2.1 Introduction of Algorithm

The goal of the bridge column optimization tool presented in this study is to provide the most economical and at the same time safe section for demands acting on the bridge piers. The workflow process of the optimizer tool is shown in Figure 2-1 below. It can be observed that first, the given bridge is analyzed and force/deformation demands are computed. Herein any elastic structural analysis tool can be used. Afterwards the cost optimizer tool is invoked. The output of the cost minimum algorithm, which is explained in the next paragraph is then used as the new input for estimating demands. The iterations are continued until the convergence of the column dimensions.

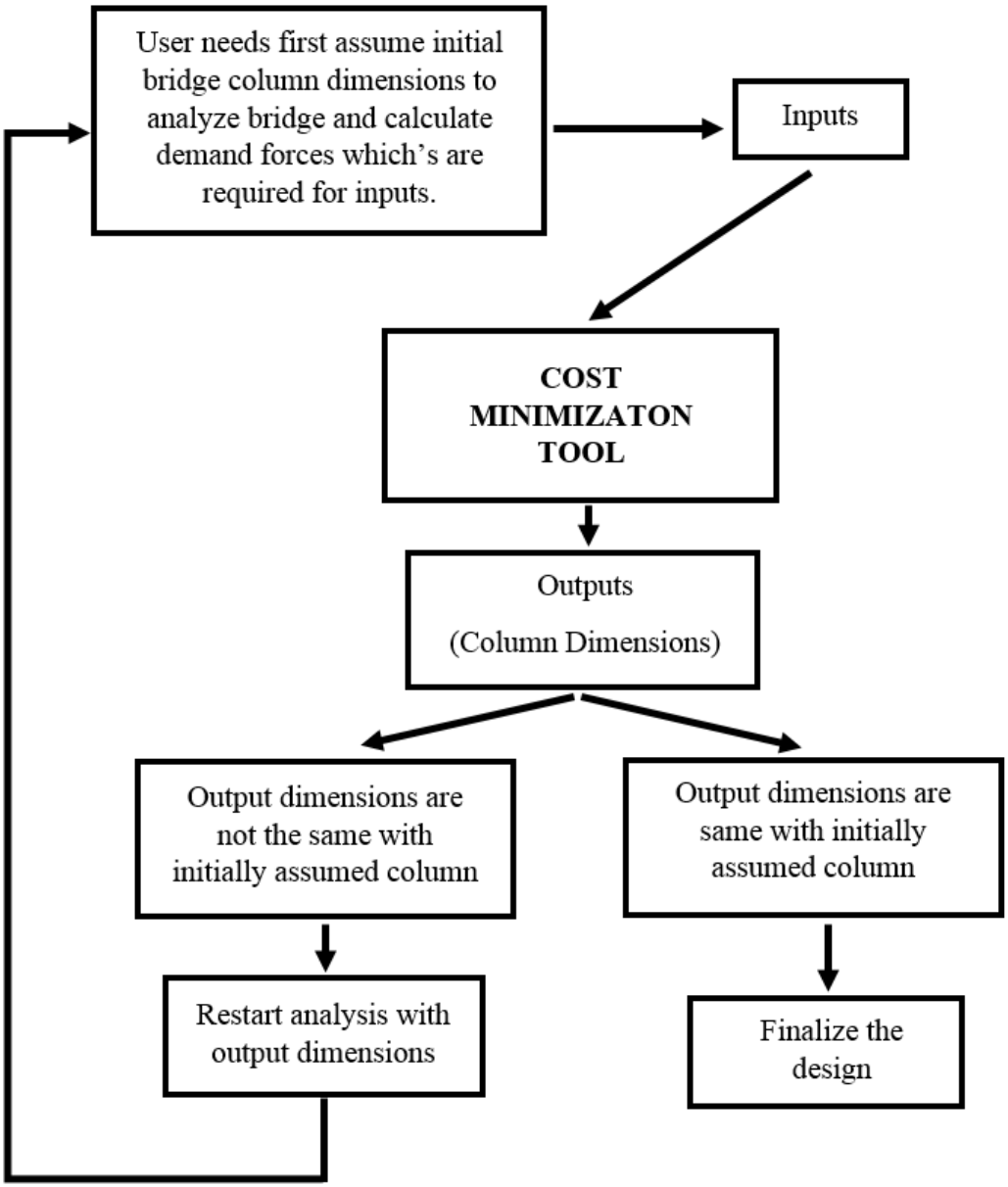

Figure 2-1 Workflow process of optimizer tool

The algorithm allows the user to choose the geometry of the column section from an architectural point of view or leave a decision of the most economical section choice to the design tool. Circular section (CS), rectangular section(RS), semi-circular section(SCS) and hollow section(HS) options are currently available as they are the most commonly used section in the bridge design practice. In addition, the designer

can specify the splice type for longitudinal bars. One or more of the lap splice or mechanical splice options can be selected. In addition to these features selected by the user, the most economical bridge column can be calculated with other inputs calculated according to the column dimensions accepted in the preliminary design. The necessary inputs for the program are given in Figure 2-2 below. In addition to these visible inputs, the user will input the axial load and corresponding biaxial moments for strength limit state in a text file format. For extreme event limit state, in addition to axial load and biaxial moment, computed column tip displacement should be provided.

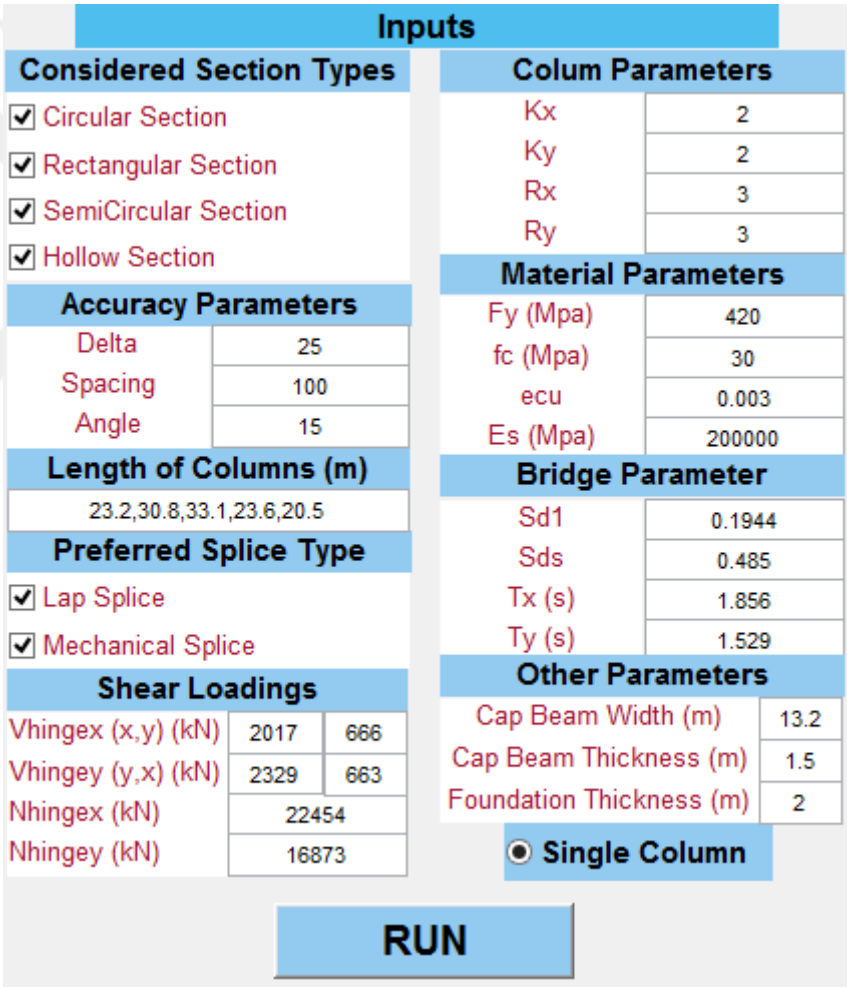

Figure 2-2 Cost minimization tool user interface for inputs

The input parameters shown in Figure 2-2 are familiar to civil engineers except accuracy parameters such as delta, spacing and angle as explained later.

The generated tool calculates the three-dimensional P-M-M capacity interaction surface for the column sections. For this purpose, the column cross section is divided into small square cell areas. Delta expresses the side length of this small square in mm. Since the biaxial moment capacity is calculated, the section capacities need to be calculated by rotating the section center at different degrees. Angle is the parameter that specifies how many degree slices the 360-degree angle will be divided into and with what precision this surface area calculation will be made. Spacing, on the other hand, specifies the iteration interval (depth/spacing) to determine the correct distance between neutral axis and extreme compression fiber. (c= 0.1: (Depth / Spacing): (Depth * 3.4)) Upon increasing the spacing, accuracy of the capacity result will obviously increase.

In the light of the information explained and shown in the above parts, the steps of the algorithm are as follows:

Step 1:

Algorithm eliminates the cross-sections that does not satisfy the following 4 requirements.

- Aspect ratio of column should be larger than 2.5 in both directions (AASHTO LRFD 5.10.11.4.1)
- Slenderness ratio of column should be lower than 100 (AASHTO LRFD 5.7.4.3)
- Cap beam cantilever part should be less than 4.5 meters if it is single column (for construction reasons)
- Maximum and minimum axial load demands should be satisfied by maximum and minimum axial load capacities for each section (both for earthquake and strength combinations) (To eliminate some sections quickly)

Step 2:

- P-Mx-My interaction capacity diagram for remaining cross-sections are generated for strength combinations.
- P-Mx-My interaction capacity diagram for remaining cross-sections are generated for earthquake combinations.
- P-Mx-My interaction capacity diagram for remaining cross-sections are generated for P-delta requirements.

The sections that do not satisfy capacity>demand relation are eliminated.

Step 3:

Cost calculations are done for only 1-meter length of columns which only includes longitudinal bars.

At the end of the cost calculations, minimum costs are taken for each main cross-section types (CS-RS-SCS-HS separately). Then in the same type of cross sections (CS-RS-SCS-HS individually) which having a cost larger than 1.5 times minimum cost for considered type of sections are eliminated. Then from all remaining cross sections (CS-RS-SCS-HS all included) which have a cost larger than the 2 times minimum cost are eliminated.

Step 4:

Shear design of remaining cross-sections are conducted following the AASHTO shear design requirements and the sections that do not satisfy ‘’V_{max}’’ (AASHTO LRFD 5.8.3.3-2) requirements are eliminated.

Step 5:

Exact longitudinal reinforcement and transverse reinforcement detailing are done. Splice and construction joint details are considered to calculate exact rebar amount. Four each column length including cap beam and foundation thicknesses all reinforcement detailing are considered in design.

Step 6:

For all remaining sections, final cost calculation is done by considering amount of materials used, cost of labor and formwork. The cross-section having a minimum cost are selected.

2.2 Database of Pier Section Designs

In this section, the database of bridge column sections formed for the cost optimizer tool will be explained. The design limits taken into account in the construction of this database will also be explained.

In this dataset, which was generated using 4 basic bridge column geometries, circular section (CS), rectangular section (RS), semicircular section (SCS) and hollow section (HS), 296 different cross sections with different dimensions (ignoring the longitudinal reinforcement layout) were designed. By changing the longitudinal reinforcement layout of these sections in various diameters in various spacing and in various rebars ratios a total of 14630 different column cross-sections were prepared. Shape distribution of database is illustrated in Figure 2-3.

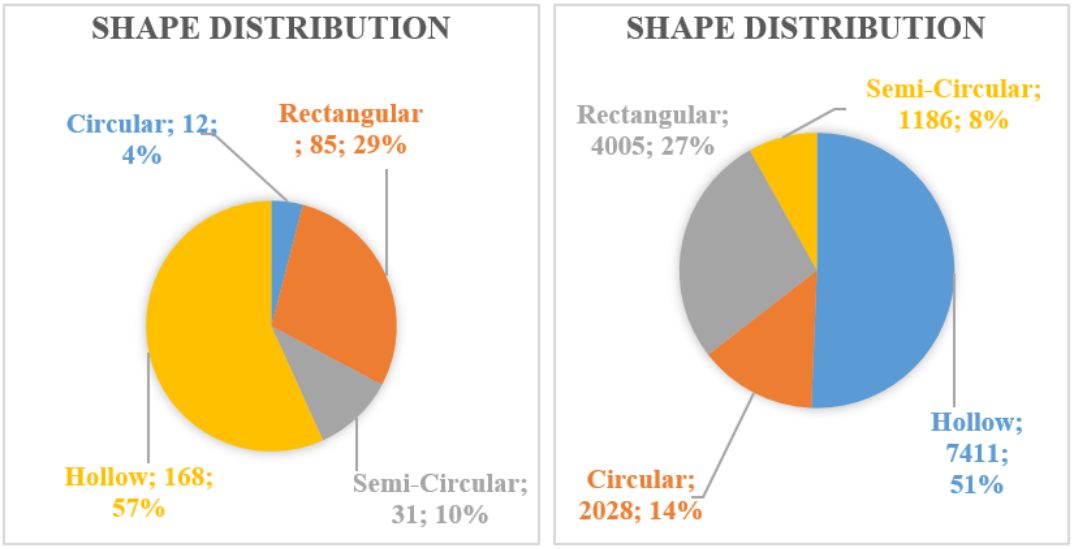

Figure 2-3 Shape distribution of sections; Left: rebar layout is not considered, Right: rebar layout is considered

Cross-section rebar layout is generated according to Table 2-1 longitudinal reinforcement spacing limit. All sections are between 1% and 4% rebar ratio according to AASHTO LRFD.

Table 2-1 Minimum and maximum spacing of longitudinal reinforcements (AASHTO LRFD 5.10.3.1)

Rebar Diameter (mm)	Min spacing (mm)	Max spacing (mm)
22	65	200-360
24	67	200-360
26	70	200-360
28	75	200-360
30	80	200-360
32	85	200-360
36	95	200-360

- 360 mm for RS, SCS, HS (5.10.11.4.1.d)
- 200 mm for CS, SCS (5.10.11.4.1.d)

Circular Sections

Twelve different circular sections; diameter increasing with 0.2 meters between 0.8m and 3m were designed. This corresponds to a total of 770 different circular sections with various reinforcement layout configurations. Distribution of longitudinal bar ratio to gross cross section area is shown in Figure 2-4.

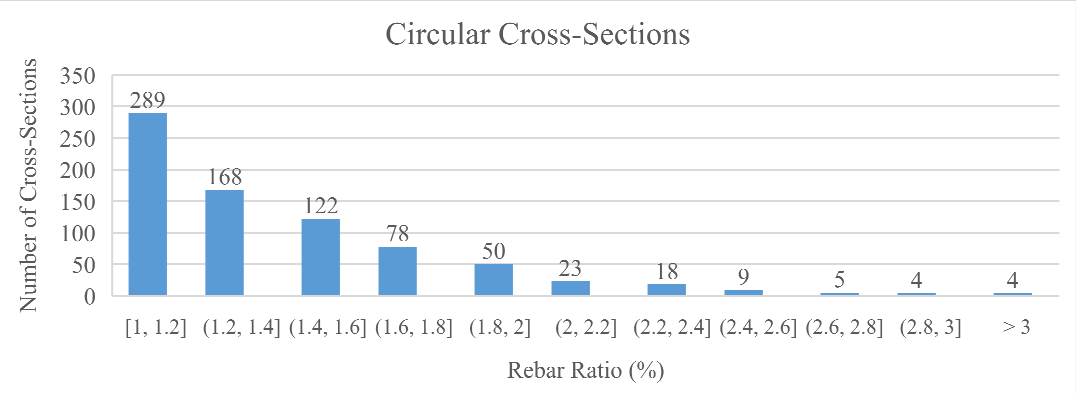

Figure 2-4 Distribution of longitudinal rebar ratios of circular sections

Rectangular Sections

Starting from 0.75m*0.75m of rectangular sections, a total of 85 cross sections were created by first increasing the width by 0.25, and when the width reaches 2 times the depth, the depth was increased by 0.25 meters, up to 3m*6m. A total of 4005 sections were obtained by changing the reinforcement layouts. Distribution of longitudinal bar ratio to the gross cross section area is shown in Figure 2-5.

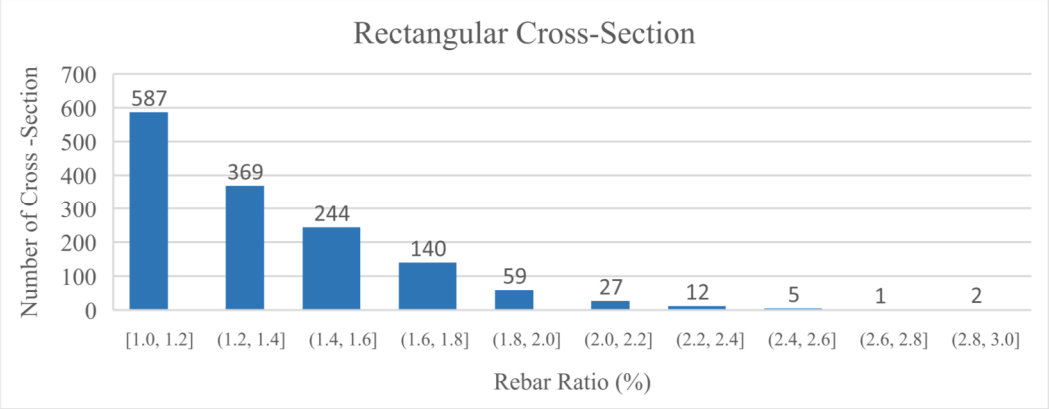

Figure 2-5 Distribution of rebar ratios on rectangular section

Semi-Circular Sections

Starting from 0.8 meters in diameter and 0.5 meters in rectangular width which are illustrated in Figure 2-6, a total of 31 different sections were created, ranging from 3 meters in diameter and 5 meters in rectangular width. This number increased to 1181 in total with various reinforcement layouts. Distribution of longitudinal bar ratio to the gross cross section area is shown in Figure 2-7

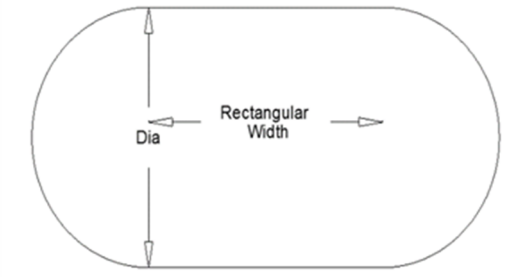

Figure 2-6 Definition of dimensions for SCS

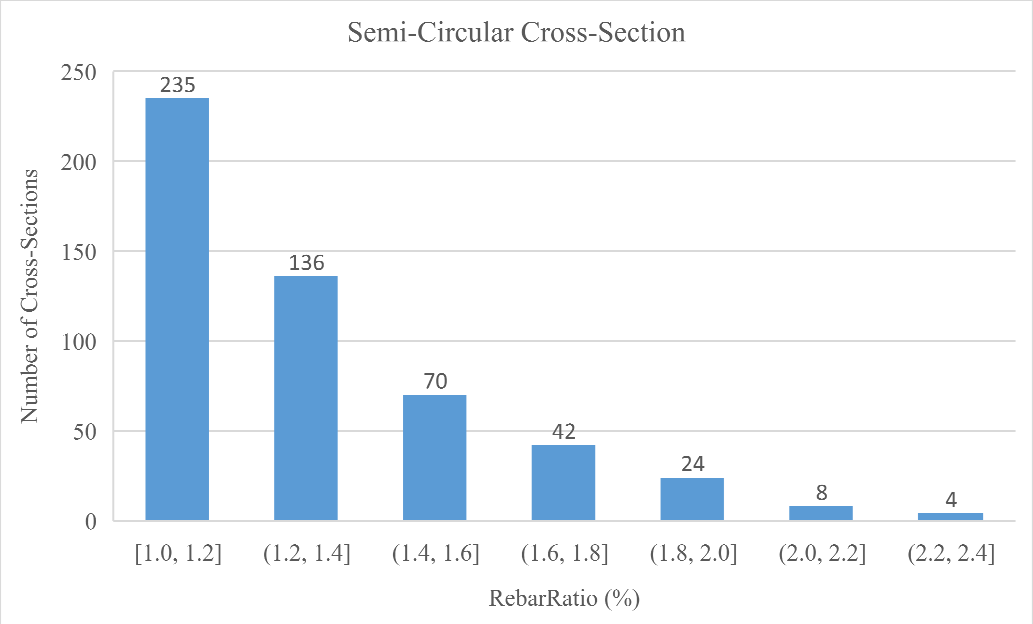

Figure 2-7 Distribution of rebar ratios on semi-circular sections

Hollow Sections

Hollow rectangular column sections starting from 3m* 3m outer dimensions with 0.5 meters' thickness were generated 168 different column section up to 4.5m.*9.5m with 0.5m and 1 m thickness respectively. A total of 7411 hollow rectangular sections were obtained by changing the reinforcement layout. Distribution of longitudinal bar ratio to the gross cross section area is shown in Figure 2-8.

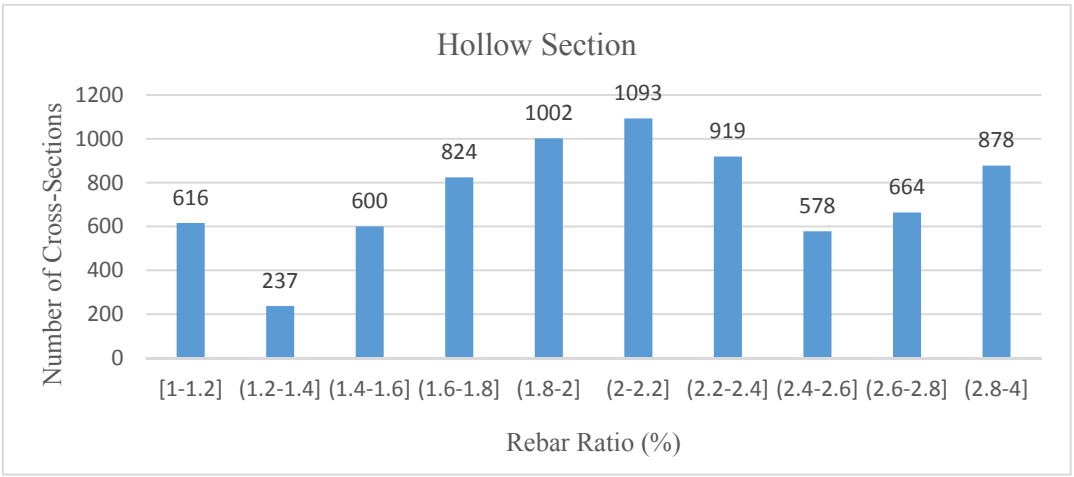

Figure 2-8 Distribution of rebar ratios on hollow sections

2.3 Assumptions in the Optimizer Tool

This tool is built for bridge columns, therefore it should include details such for transverse reinforcement and longitudinal reinforcements. In addition, it also calculates the construction joint lengths that should be designed according with the longitudinal reinforcement diameter for each column length, which decreases the cost if lap splice is to be used. The cost calculation details are provided below. For the costs calculation, the data in the unit cost table of the General Directorate of Highways was taken as a basis, and for the missing costs, information was collected from the market on July 2021.

Rebar cost includes both material and labor cost

- Φ16, Φ18, Φ20 , Φ22 , Φ24 , Φ26 , Φ28, Φ30 → 8970 TL/ton
- Φ32, Φ36 → 9720 TL/ton

Concrete cost includes both material and worker cost

- C30 → 500 TL/m^3

Formwork cost includes both material and worker cost

- Circular Section → 220 TL/m^3
- Rectangular Section → 240 TL/m^3
- Semi-Circular Section → 220 TL/m^3
- Hollow Section → 260 TL/m^3

Mechanical splice cost includes both material and worker cost

- Φ22 = 120 TL/piece
- Φ24 = 140 TL/piece
- Φ26 = 160 TL/piece
- Φ28 = 180 TL/piece
- Φ30 = 200 TL/piece
- Φ32 = 220 TL/piece
- Φ36 = 260 TL/piece

Transverse reinforcement detailing, longitudinal reinforcement splice length and shear capacity calculations are taken from the relevant sections in AASHTO LRFD. Following requirements are satisfied in each design:

Transverse Bars Spacing Limits

- For CS (spirals) (AASHTO LRFD 5.10.6.2)
  - ✓ Maximum spacing minimum of (6*d;15 cm)
  - ✓ Minimum spacing (25.4 mm+d) where d: diameter of spiral reinforcement
- For SCS, RS, HS (ties) (AASHTO LRFD 5.10.6.3)
  - ✓ Maximum longitudinal spacing is 30 cm but if diameter of 32 mm or larger longitudinal bars bundled (2 or more) together, spacing limit is 15 cm
  - ✓ Maximum lateral spacing of transverse rebar is 600 mm

Plastic Hinge Region Definition and Rebar Limits (AASHTO LFRD 5.10.11.4)

- ✓ Maximum of (0.45m; maximum column dimensions; column height/6)
- ✓ Maximum lateral spacing of transverse rebar is 360 mm
- ✓ Minimum dist. between longitudinal bars with restrained and non-restrained is 170 mm
- ✓ Maximum longitudinal spacing of transverse bars 10 cm

End Region Connections (AASHTO LFRD 5.10.11.4)

Longitudinal reinforcement should be extended as 1.25*60*Φ[6].

Transverse reinforcement shall be continued half of maximum dimension of column or 38 cm.

[6] Φ refers to longitidunal rebar diameter

Lap Splice and Rebar End Detailing

The required bending angle and minumum bending length for end detailing of transverse rebars are listed based on the rebar bar diameters in the Figure 2-9. The minimum lap splice and end hook length for longitidunal rebars are also listed based on the rebar diameters in the Table 2-2.The lap splice lengths is presented in Table 2-2 is valid only for C30 concrete class and S420 class steel according to AASHTO.

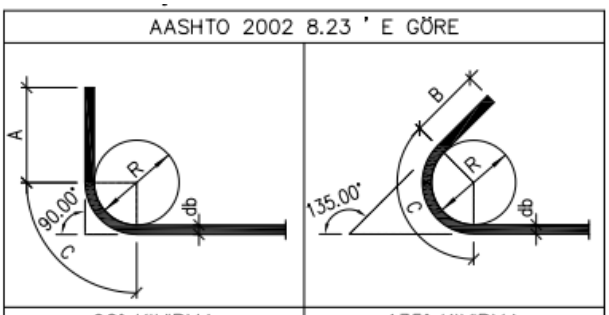

90° KIVIRMA					135° KIVIRMA				
DONATI ÇAPI (db) (mm)	A (cm)	C (cm)	A+C (cm)	R (cm)	DONATI ÇAPI (db) (mm)	B (cm)	C (cm)	B+C (cm)	R (cm)
8	5	3	8	3.2	8	5	4	9	3.2
10	6	4	10	4.0	10	6	5	11	4.0
12	8	4	12	4.8	12	8	6	14	4.8
14	9	5	14	5.6	14	9	7	16	5.6
16	10	5	15	6.4	16	10	8	18	6.4
18	22	9	31	10.8	18	11	13	24	10.8
20	24	10	34	12.0	20	12	15	27	12.0
22	27	11	38	13.2	22	14	16	30	13.2
24	29	12	41	14.4	24	15	17	32	14.4
25	30	12	42	15.0	25	15	18	33	15.0
26	31	13	44	15.6	26	16	19	35	15.6
32	39	20	59	25.6	32	20	30	50	25.6

Figure 2-9 Bending length details of rebars

Table 2-2 Lap splice and hook bending length (C30&S420)

	Lap Splice (m)	**Hook Length (m)**
Φ22	1.30	0.50
Φ24	1.45	0.50
Φ26	1.55	0.50
Φ28	1.70	0.50
Φ30	1.80	0.50
Φ32	1.90	0.60
Φ36	2.15	0.70

2.4 Verification of the Interaction Surface

The generated tool computes the 3D P-M-M interaction for the cross-sections in the dataset mentioned in the previous sections. In the next step, it designs transverse reinforcement based on shear demands according to the specification. In this section, the validity of the 3-dimensional P-M-M interaction generated by the algorithm is demonstrated.

A total of 8 different sections were selected, for 2 random column sections with the 4 different geometries in the dataset. The results of P-M-M calculated by the optimizer tool for these 8 randomly selected cross-sections are compared with the results of P-M-M calculated by the Sp-Column software (Structure Point, LLC.,2016), which is widely used in the bridge design practice.

For each column section, first the P-M_x one-way interaction diagram and then the M_x-M_y interaction diagram under 2 different axial loads are compared.
The P-M-M results of the tool are directly dependent on accuracy parameters which are described in section 2.4.1. The results to be presented in this part are obtained by taking the accuracy parameters as shown in the Figure 2-2. Briefly, delta was taken as 25, spacing was taken as 100 and angle was taken as 12. The definitions of these parameters are given in section 2.4.1.
Before comparing the results, the assumptions for computing the P-M-M capacities of sections and comparing the results are presented.

2.4.1 Definitions and Assumptions Behind the P-M-M calculations

All computations are done based on the load and capacity design method with the following assumptions:

- Equilibrium and strain compatibility are satisfied.
- Strain in the concrete and the reinforcement are directly proportional to the distance from neutral axis based on plane sections remain plane hypothesis.

- Maximum ultimate strain of extreme concrete fiber under compression is 0.003 (AASHTO LRFD).
- Uniform rectangular concrete stress block is used with the following assumptions:
  - The maximum uniform concrete compression stress is equal to $0.85f_c$
  - Block depth is equal to $k_1 c$

  Where;

  c is distance between the neutral axis and the extreme compression fiber

  $0.65 \leq k_1 = (149 - f_c)/140 \leq 0.85 \qquad (MPa)$ (2.1)
- For concrete replaced by rebars; corresponding area is deducted from the gross area.
- Elastic-plastic stress strain distribution is used. Stress on the rebar is proportional to the steel strain up to yield strain. If steel strains are greater than yield strain rebar stress is assumed as f_y.
- The tensile strength of concrete is neglected.
- Stresses in the reinforcing bars are calculated based on strain at bars centroid.
- Axial and flexural capacities are reduced with Φ factor based on AASHTO,

  where Φ varies based on steel strain as shown in Figure 2-10.

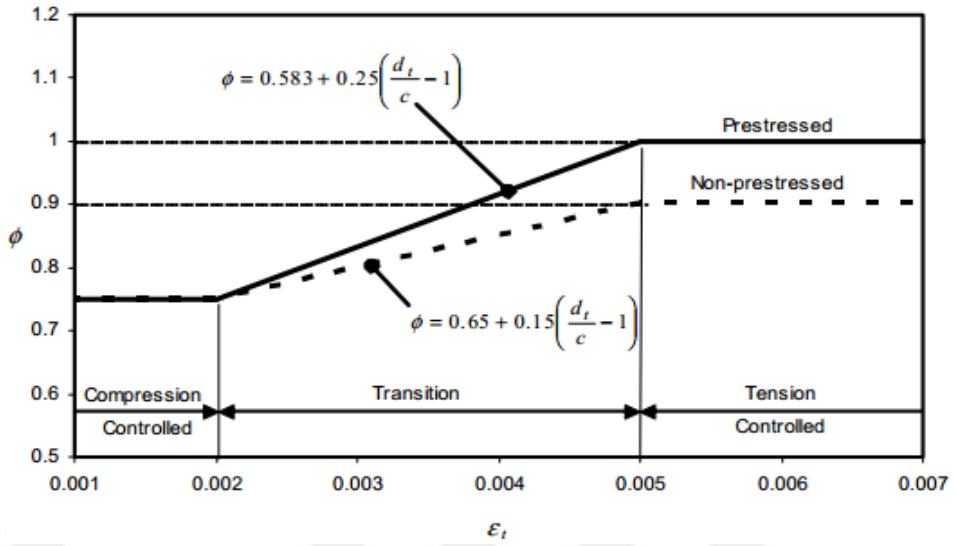

Figure 2-10 Variation of Φ with the tensile strain for rebars (Fy=420)

Variation of Φ in Figure 2-10 is only valid for strength limit state. As AASHTO states at 5.10.11.4.1.b both for tension and compression controlled failure, Φ is equal to 0.9 for the extreme event limit states. However, at this chapter comparisons are done according to the strength limits states shown in Figure 2-10.

With the above assumptions and procedures, the results from the code were compared with the SpColumn results for validation.

The errors in the area calculation is obtained with the formula shown below:

$$\frac{ACR - ASPR}{ASPR} * 100 = Area\ Error\ \%^{7} \qquad (2.2)$$

In the following figures from Figure 2-11 to Figure 2-18, for each column section, firstly, the section geometry and dimensions (in mm) are illustrated. Secondly the P-M_x one-way interaction diagram is shown and then the M_x-M_y interaction diagram under 2 different axial loads is presented. Error comparison is done according to these M_x-M_y interactions.

[7] ACR = area under the plot which was drawn based on code results.
ASPR = area under the plot which was drawn based on the SpColumn results.

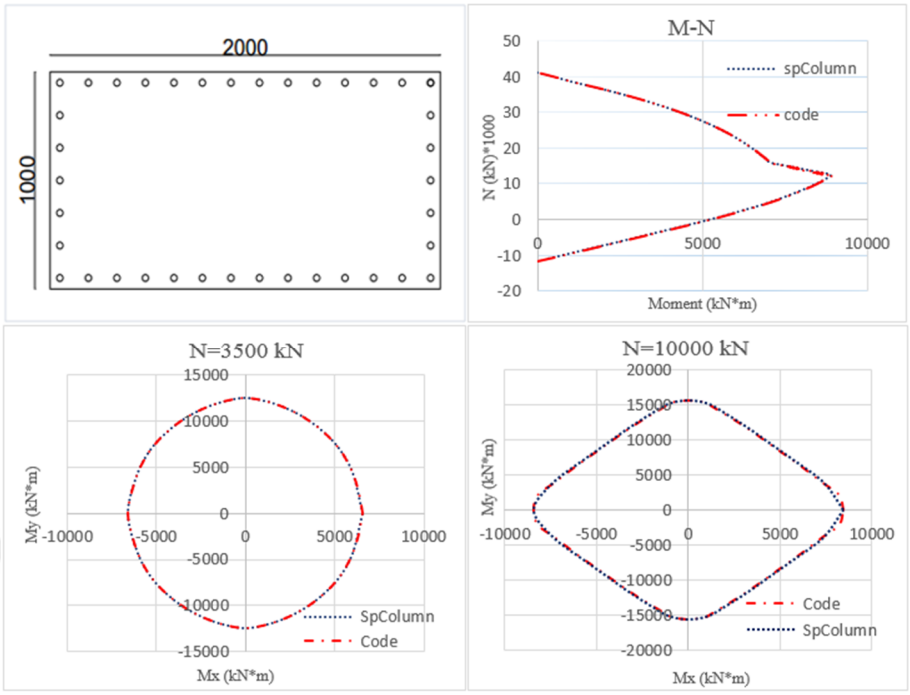

Figure 2-11 Section RS-1 with 1.528% rebar ratio

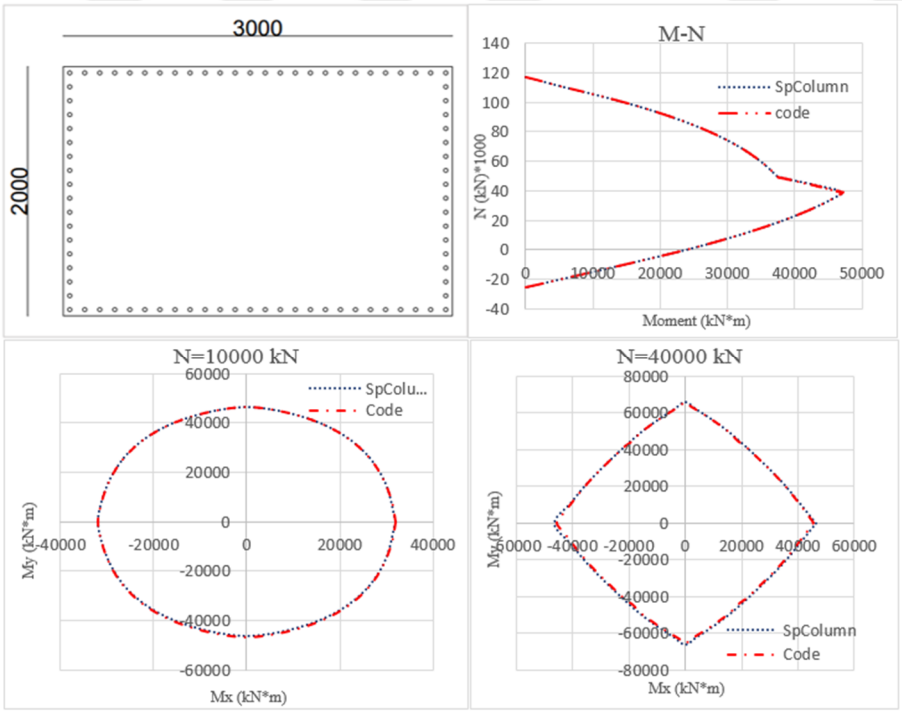

Figure 2-12 Section RS-2 with 1.126% rebar ratio

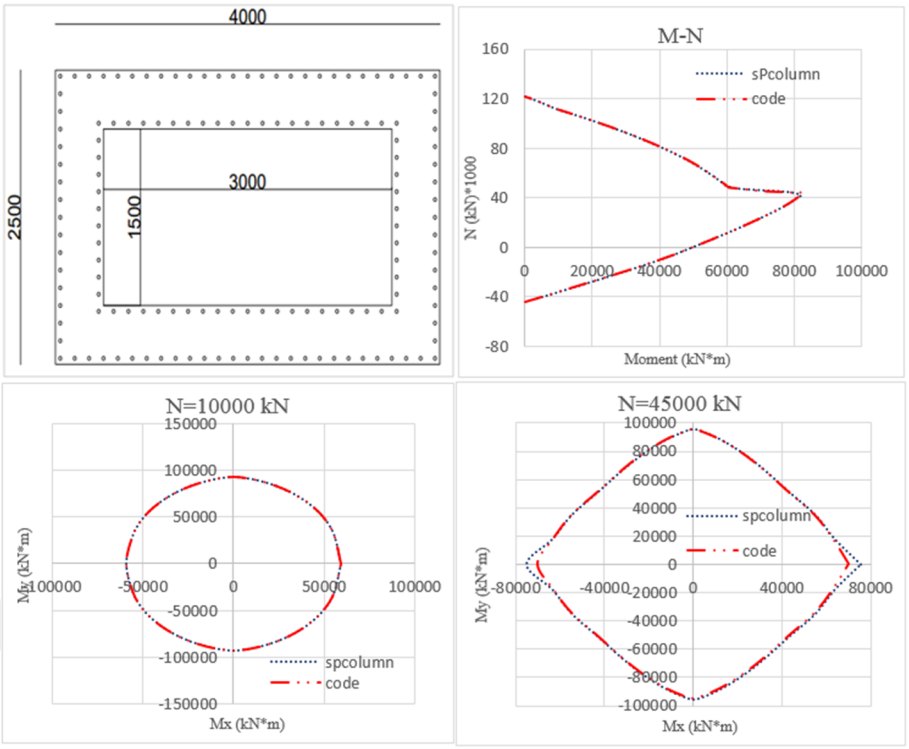

Figure 2-13 Section HS-1 with 2.135% rebar ratio

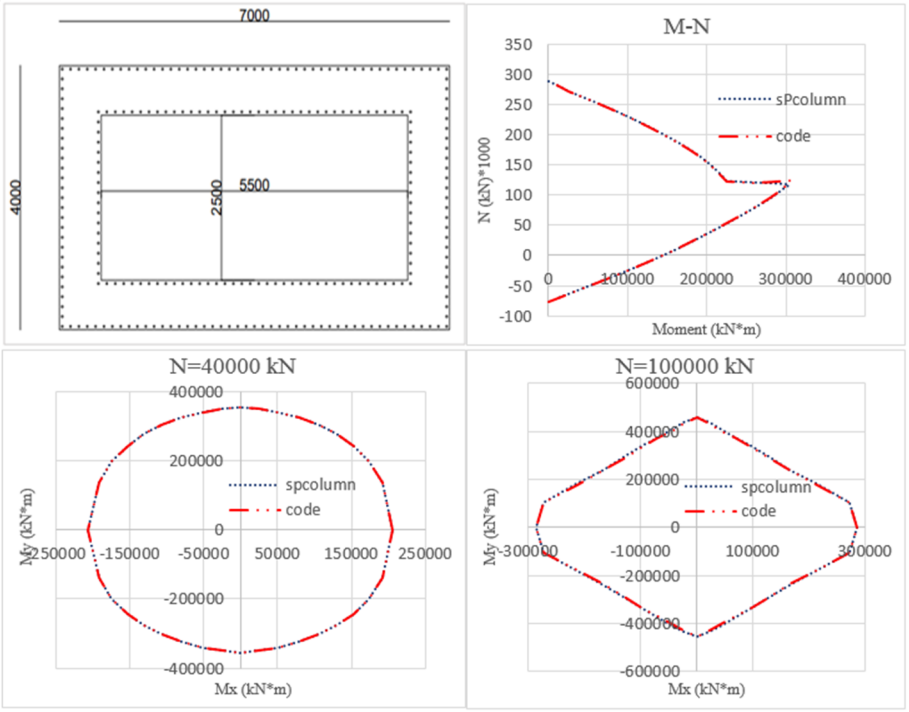

Figure 2-14 Section HS-2 with 1.144% rebar ratio

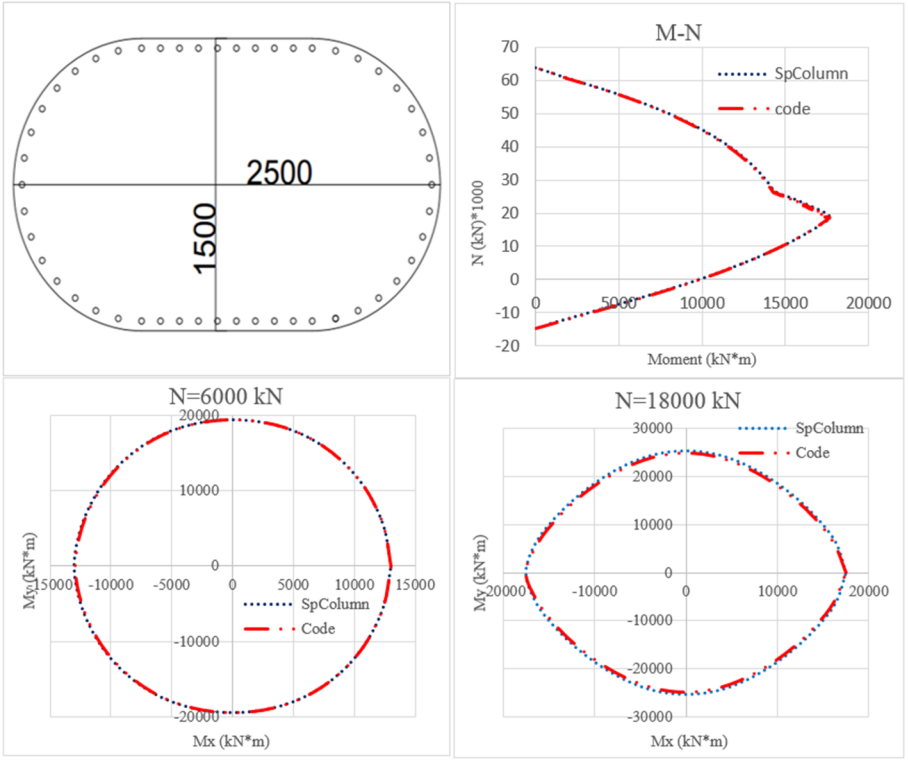

Figure 2-15 Section SCS-1 with 1.180% rebar ratio

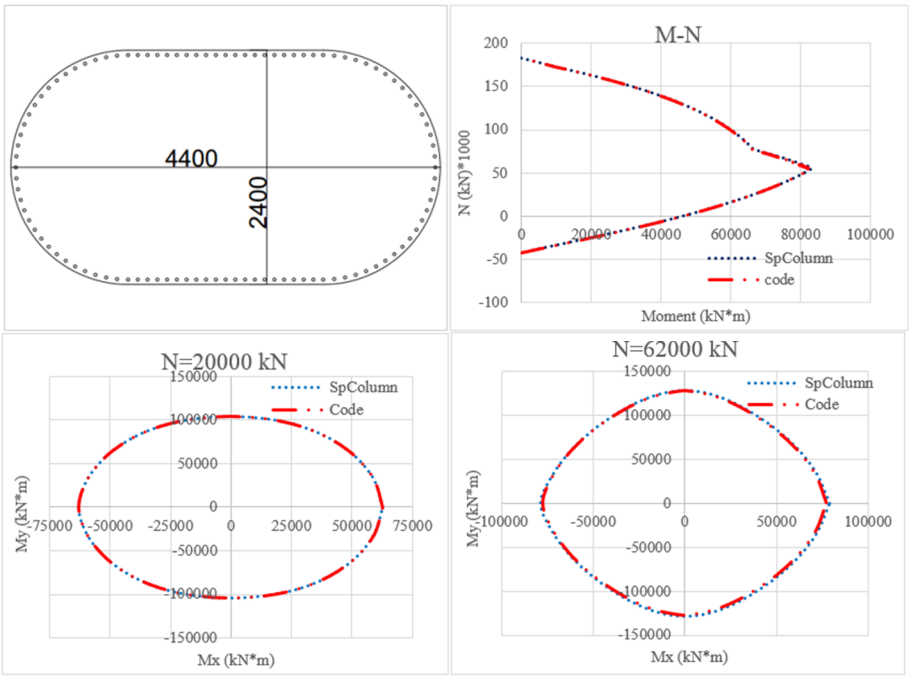

Figure 2-16 Section SCS-2 with 1.200% rebar ratio

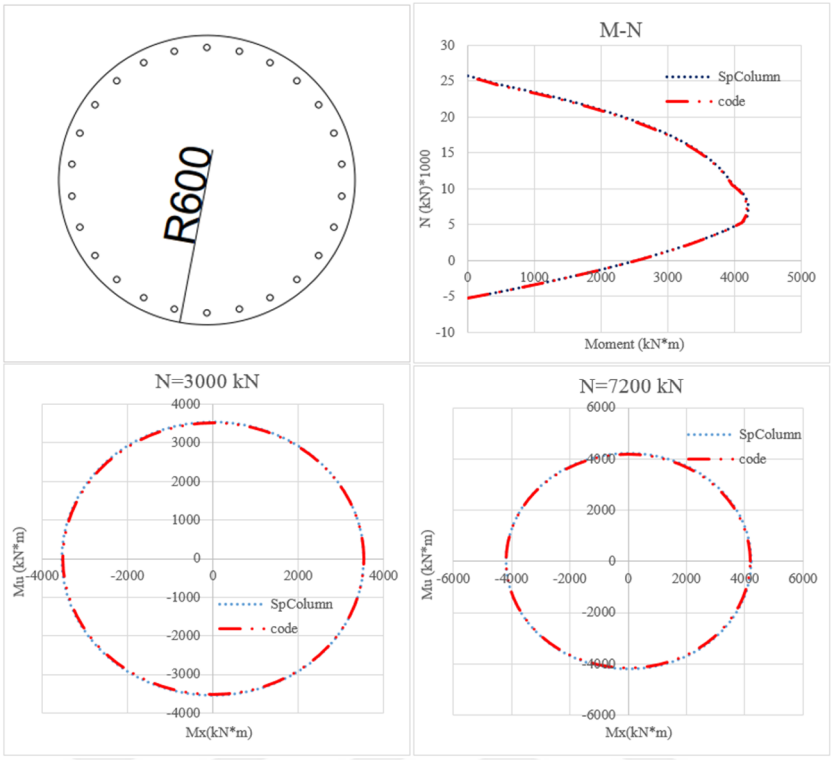

Figure 2-17 Section CS-1 with 1.220% rebar ratio

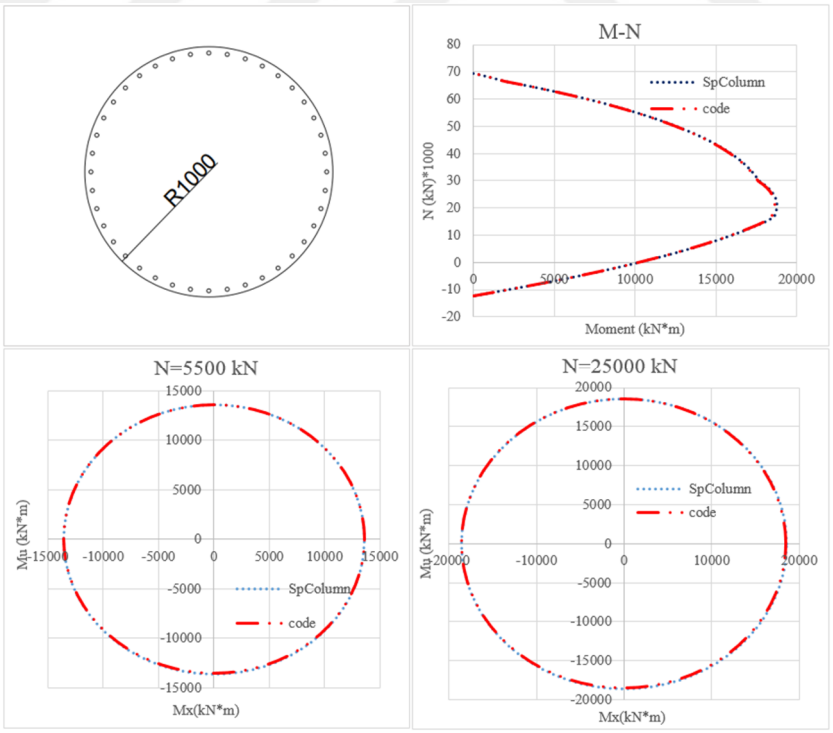

Figure 2-18 Section CS-2 with 1.024% rebar ratio

As previously described SpColumn M_x-M_y interaction diagrams are assumed as correct, and these results are the reference to generated algorithm results. The errors, listed in the Table 2-3 are presented in Figure 2-19. As can be understood from above figures and the results shown here, the generated algorithm calculates P-M-M results with acceptable small errors. The standard deviation of the errors for 16 sections is 0.9%. As can be clearly seen from Figure 2-19, the errors larger than 0.5% are negative which means that, proposed algorithm calculates M_x-M_y diagram conservatively, the results obtained are on the safe compared to SpColumn.

Table 2-3 Errors of Mx-My Interaction

Name	Error (%)
RS-1-1	0.570
RS-1-2	-0.010
RS-2-1	0.477
RS-2-2	-1.168
HS-1-1	0.005
HS-1-2	-1.767
HS-2-1	0.051
HS-2-2	-1.133
SCS-1-1	-0.488
SCS-1-2	-3.010
SCS-2-1	-0.220
SCS-2-2	-2.249
CS-1-1	0.027
CS-1-2	-0.960
CS-2-1	0.215
CS-2-2	-0.330

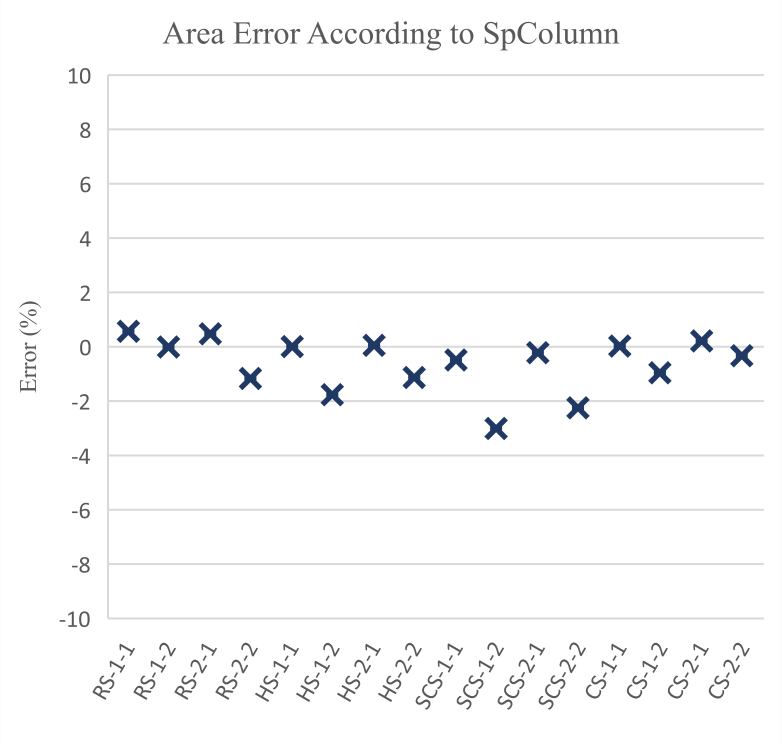

Figure 2-19 Area Errors According to SpColumn

CHAPTER 3

CASE STUDY BRIDGES

3.1 Introduction

In this section, the performance of the method proposed in this study is demonstrated by using the data of actual bridges. For this study, 11 different highway bridges were selected and the column sections were optimized by using the bridge column optimizer tool. 11 previously designed and built RC bridge piers were optimized in such a way that all elements except the columns remained the same. The optimization process for these 11 selected bridges was conducted with two different scenarios. In scenario 1, the most economical column was calculated by including any of the 4 different section types (CS, RS, SCS, HS), whichever was the optimum. However, in the 2nd scenario, the most economical column was calculated only for the column geometry of the bridge in the original design. For example, if the bridge was actually designed with a circular section column, optimization was made by searching for the optimum column only among the circular sections in the dataset. This allowed us to optimize the bridge design by considering the architectural and visual concerns, if any. It was explained in the previous sections that there is also the option to select section geometry in the optimization tool, so scenario 2 can be realized easily.

As explained above, the generated tool output covers all the necessary parameters for column design and detailing for each bridge except the reinforcement needed for workmanship purposes. According to these outputs, the total cost of bridge columns was then calculated. Column reinforcement sheet drawings were prepared according to the outputs. The actual costs of the designed columns are also calculated according to the drawings. These actual costs are compared with the output cost after section selection in Chapter 5.

In this section, firstly, the general information about the selected bridges is given. Then, the output of the tool as a result of the optimization of a bridge is shown as an example. Finally, the cost of the most economical column selected for each bridge is compared with the alternative safe columns by considering the cost-distribution among all cost items (concrete cost, longitudinal rebar cost, transverse rebar cost and mechanical splice cost). The comparison of the optimum section costs of all bridges with the actual designed costs is shown in Chapter 5.

The brief information on each bridge is shown in from Figures 3-1 up to Figure 3-11. It can be observed total span length of the selected bridges varies between 71.1m to 238.9m. The pier height varies between 5.10m to 33.10m. The longitudinal reinforcement ratio range is from 1.01% to 1.77% with the column sizes changing from 1.5m*1.5m rectangular section to 3.0m*5.0m hollow section with 0.5m wall thickness. Among the 11 selected designed bridges 2 have circular, 7 semi-circular, and the remaining ones have rectangular and hollow core sections.

Properties of Bridge 1

Picture of Bridge



EQ Parameters

Designed EQ return Period (year)	2475
Pga (g)	0.543
Sd1	0.6093
Sds	1.346
Tx (s)	1.445
Ty (s)	1.437
Soil Type	C

General Information

Number of Span	2x4
Total Bridge Length (m)	2x169.5
Number Of Columns	2x3
Skew Angle (°)	0
Column Type	Circular
Avarage Column Height (m)	23.22
Column Concrete Strength fc (Mpa)	30
Column Rebar Strength Fy (Mpa)	420

Column Dimensions and Rebar Layout

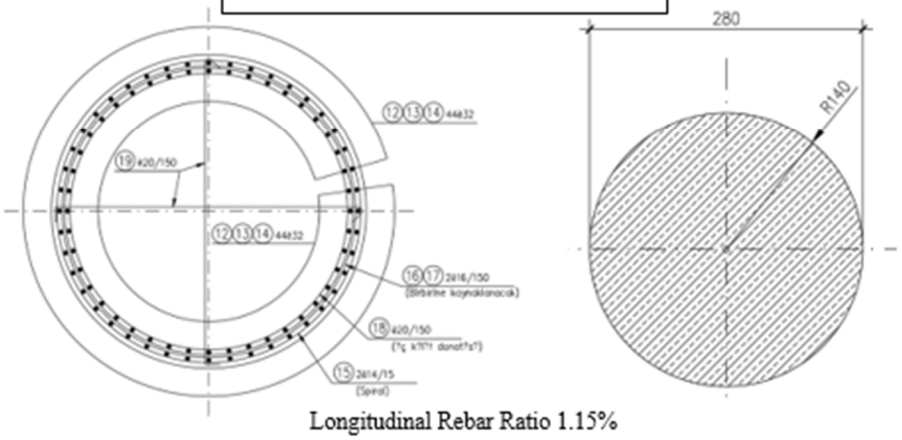

Longitudinal Rebar Ratio 1.15%

Splice Type is lap splice

Other Information

Cap Beam Width (m)	16.2
Cap Beam Thickness (m)	2
Foundation Thickness (m)	2.5
Single Column in Pier	YES

TOTAL COLUMN COST IS 2042137 TL

Figure 3-1 Ticket of Bridge 1

Properties of Bridge 2

Picture of Bridge



EQ Parameters

Designed EQ return Period (year)	2475
Pga (g)	0.595
Sd1	0.646
Sds	1.485
Tx (s)	0.832
Ty (s)	0.254
Soil Type	C

General Information

Number of Span	2
Total Bridge Length (m)	71.1
Number Of Columns	3
Skew Angle (°)	41
Column Type	Circular
Avarage Column Height (m)	6.57
Column Concrete Strength fc (Mpa)	30
Column Rebar Strength Fy (Mpa)	420

Column Dimensions and Rebar Layout

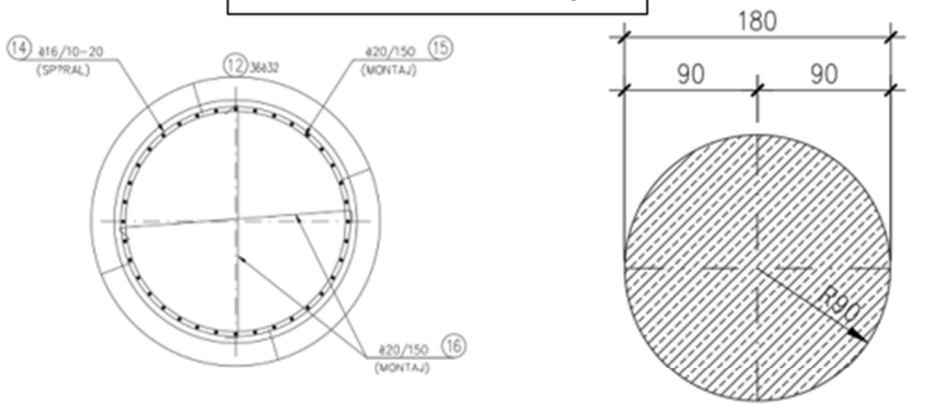

Longitudinal Rebar Ratio 1.14%

No Splice

Other Information

Cap Beam Width (m)	20.4
Cap Beam Thickness (m)	1.5
Foundation Thickness (m)	1.5
Single Column in Pier	NO

TOTAL COLUMN COST IS 148683 TL

Figure 3-2 Ticket of Bridge 2

Properties of Bridge 3

Picture of Bridge



EQ Parameters

Designed EQ return Period (year)	2475
Pga (g)	0.833
Sd1	0.924
Sds	2.091
Tx (s)	0.622
Ty (s)	0.242
Soil Type	D

General Information

Number of Span	4
Total Bridge Length (m)	109.9
Number Of Columns	9
Skew Angle (°)	0
Column Type	Rectangular
Avarage Column Height (m)	5.10
Column Concrete Strength fc (Mpa)	30
Column Rebar Strength Fy (Mpa)	420

Column Dimensions and Rebar Layout

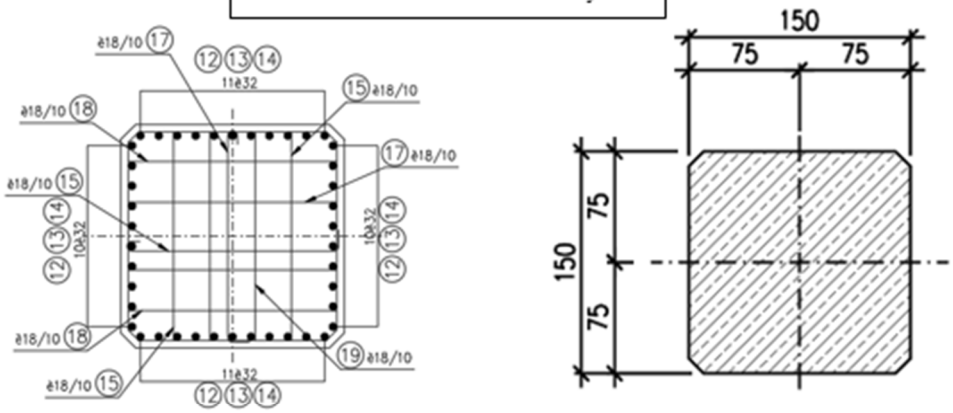

Longitudinal Rebar Ratio 1.50%

No Splice

Other Information

Cap Beam Width (m)	14.9
Cap Beam Thickness (m)	1.5
Foundation Thickness (m)	1.5
Single Column in Pier	NO

TOTAL COLUMN COST IS 651504 TL

Figure 3-3 Ticket of Bridge 3

Properties of Bridge 4

Drawing of Bridge

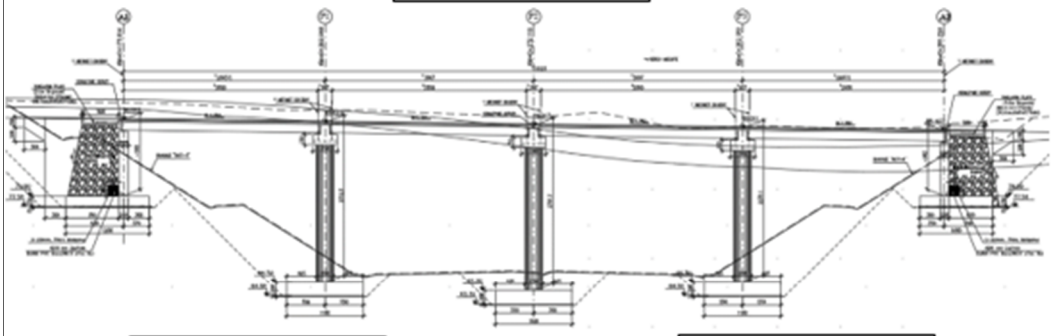

EQ Parameters

Designed EQ return Period (year)	2475
Pga (g)	0.626
Sd1	0.6002
Sds	1.544
Tx (s)	1.163
Ty (s)	0.601
Soil Type	C

General Information

Number of Span	4
Total Bridge Length (m)	118.2
Number Of Columns	12
Skew Angle (°)	19
Column Type	Semi-Circular
Avarage Column Height (m)	19.90
Column Concrete Strength fc (Mpa)	30
Column Rebar Strength Fy (Mpa)	420

Column Dimensions and Rebar Layout

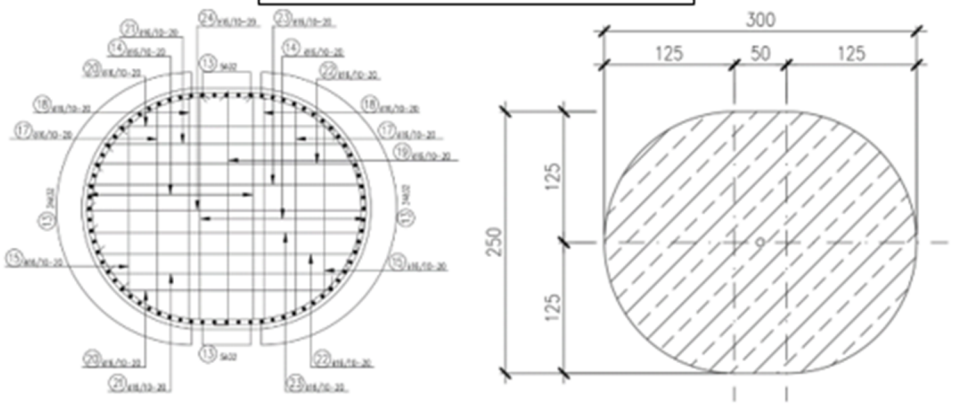

Longitudinal Rebar Ratio 1.02%

Splice Type is lap splice

Other Information

Cap Beam Width (m)	31.44
Cap Beam Thickness (m)	1.5
Foundation Thickness (m)	2
Single Column in Pier	NO

TOTAL COLUMN COST IS 4887283 TL

Figure 3-4 Ticket of Bridge 4

Properties of Bridge 5

Drawing of Bridge

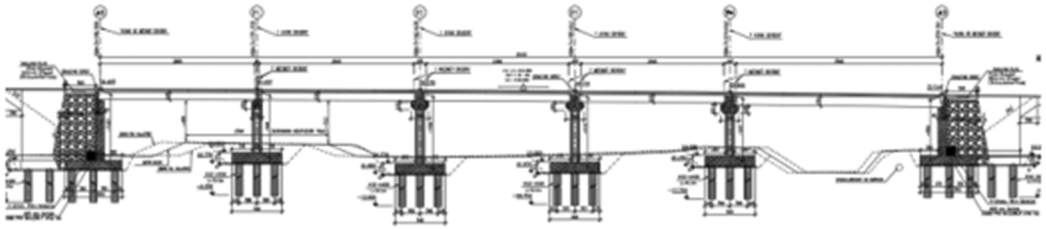

EQ Parameters

Designed EQ return Period (year)	2475
Pga (g)	0.517
Sd1	0.7755
Sds	1.765
Tx (s)	0.803
Ty (s)	0.3516
Soil Type	D

General Information

Number of Span	2x5
Total Bridge Length (m)	2x141.8
Number Of Columns	2x8
Skew Angle (°)	13
Column Type	Semi-Circular
Avarage Column Height (m)	7.68
Column Concrete Strength fc (Mpa)	30
Column Rebar Strength Fy (Mpa)	420

Column Dimensions and Rebar Layout

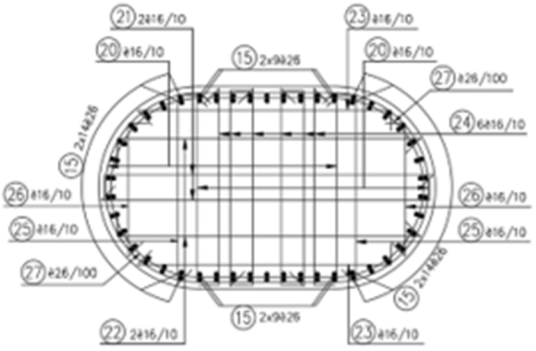

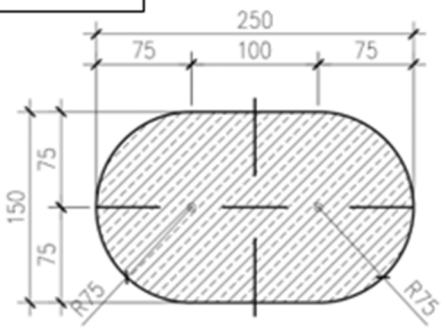

Longitudinal Rebar Ratio 1.49%

Splice Type is lap splice

Other Information

Cap Beam Width (m)	13.8
Cap Beam Thickness (m)	1.2
Foundation Thickness (m)	1.75
Single Column in Pier	NO

TOTAL COLUMN COST IS 1981871 TL

Figure 3-5 Ticket of Bridge 5

Properties of Bridge 6

Picture of Bridge



EQ Parameters

Designed EQ return Period (year)	2475
Pga (g)	0.549
Sd1	0.6146
Sds	1.363
Tx (s)	1.2
Ty (s)	0.575
Soil Type	C

General Information

Number of Span	4
Total Bridge Length (m)	117.1
Number Of Columns	9
Skew Angle (°)	0
Column Type	Semi-Circular
Avarage Column Height (m)	16.36
Column Concrete Strength fc (Mpa)	30
Column Rebar Strength Fy (Mpa)	420

Column Dimensions and Rebar Layout

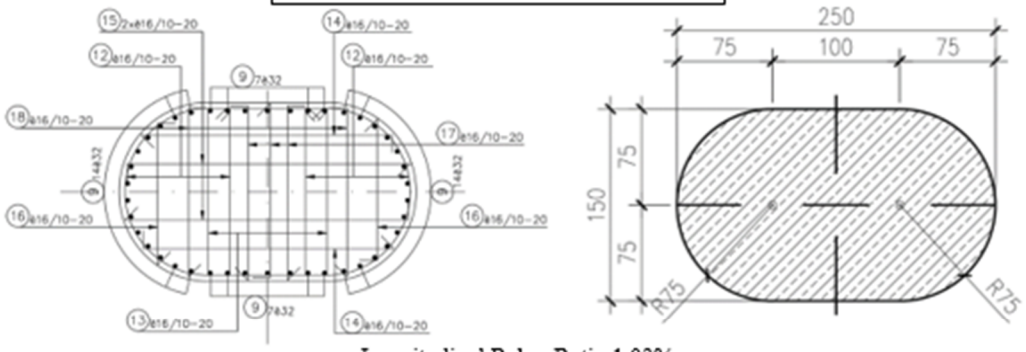

Longitudinal Rebar Ratio 1.03%

Splice Type is lap splice

Other Information

Cap Beam Width (m)	19.7
Cap Beam Thickness (m)	1.5
Foundation Thickness (m)	1.5
Single Column in Pier	NO

TOTAL COLUMN COST IS 1605849 TL

Figure 3-6 Ticket of Bridge 6

Properties of Bridge 7

Picture of Bridge



EQ Parameters

Designed EQ return Period (year)	2475
Pga (g)	0.566
Sd1	0.7194
Sds	1.408
Tx (s)	1.132
Ty (s)	0.586
Soil Type	D

General Information

Number of Span	5
Total Bridge Length (m)	123.6
Number Of Columns	8
Skew Angle (°)	10
Column Type	Semi-Circular
Avarage Column Height (m)	14.47
Column Concrete Strength fc (Mpa)	30
Column Rebar Strength Fy (Mpa)	420

Column Dimensions and Rebar Layout

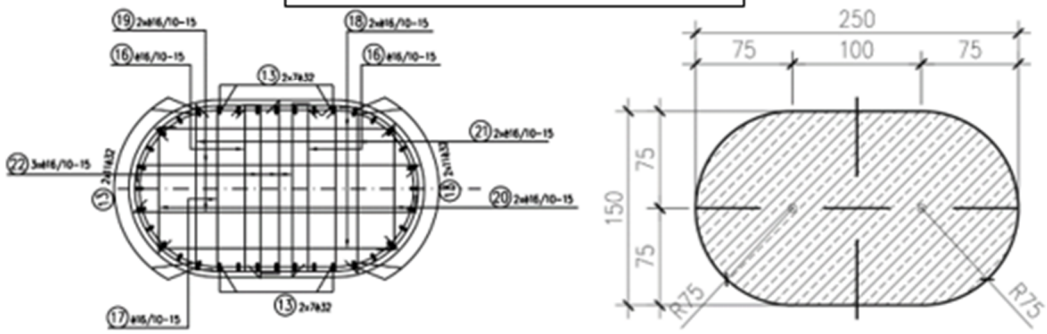

Longitudinal Rebar Ratio 1.77%

Splice Type is lap splice

Other Information

Cap Beam Width (m)	14.95
Cap Beam Thickness (m)	1.5
Foundation Thickness (m)	1.75
Single Column in Pier	NO

TOTAL COLUMN COST IS 1709117 TL

Figure 3-7 Ticket of Bridge 7

Properties of Bridge 8

Picture of Bridge



EQ Parameters

Designed EQ return Period (year)	2475
Pga (g)	0.754
Sd1	0.533
Sds	1.881
Tx (s)	1.59
Ty (s)	0.618
Soil Type	B

General Information

Number of Span	4
Total Bridge Length (m)	101.7
Number Of Columns	6
Skew Angle (°)	0
Column Type	Semi-Circular
Avarage Column Height (m)	19.33
Column Concrete Strength fc (Mpa)	30
Column Rebar Strength Fy (Mpa)	420

Column Dimensions and Rebar Layout

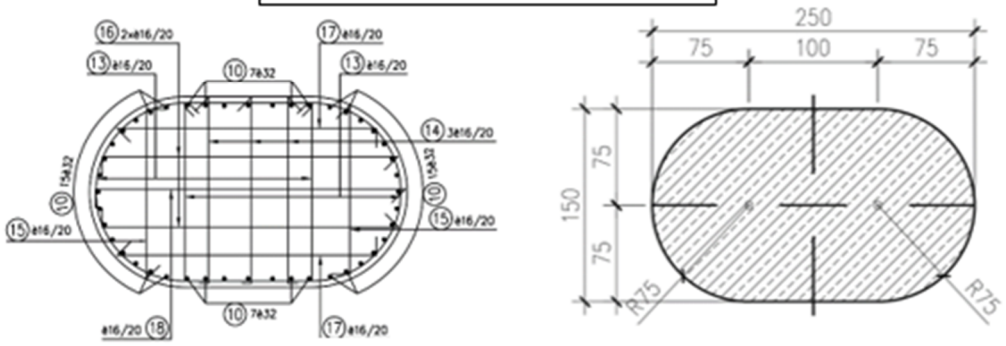

Longitudinal Rebar Ratio 1.08%

Splice Type is lap splice

Other Information

Cap Beam Width (m)	13
Cap Beam Thickness (m)	1.75
Foundation Thickness (m)	1.5
Single Column in Pier	NO

TOTAL COLUMN COST IS 1301544 TL

Figure 3-8 Ticket of Bridge 8

Properties of Bridge 9

Picture of Bridge



EQ Parameters

Designed EQ return Period (year)	2475
Pga (g)	0.703
Sd1	0.775
Sds	1.768
Tx (s)	0.978
Ty (s)	0.48
Soil Type	D

General Information

Number of Span	4
Total Bridge Length (m)	101.7
Number Of Columns	6
Skew Angle (°)	0
Column Type	Semi-Circular
Avarage Column Height (m)	16.32
Column Concrete Strength fc (Mpa)	30
Column Rebar Strength Fy (Mpa)	420

Column Dimensions and Rebar Layout

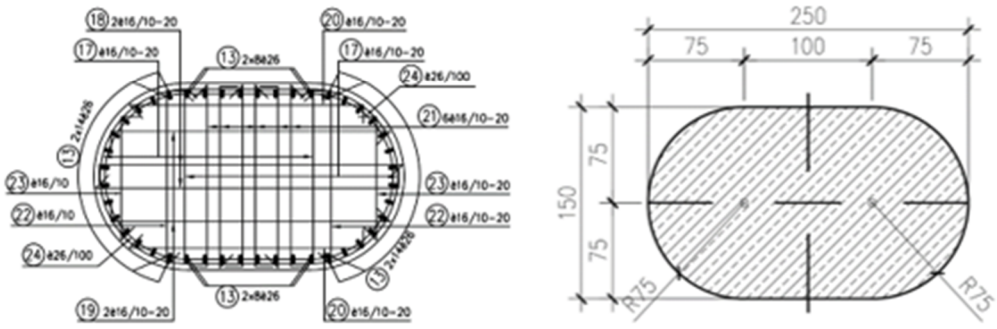

Longitudinal Rebar Ratio 1.43%

Splice Type is lap splice

Other Information

Cap Beam Width (m)	13
Cap Beam Thickness (m)	1.5
Foundation Thickness (m)	1.75
Single Column in Pier	NO

TOTAL COLUMN COST IS 1341942 TL

Figure 3-9 Ticket of Bridge 9

Properties of Bridge 10

Picture of Bridge



EQ Parameters

Designed EQ return Period (year)	2475
Pga (g)	0.566
Sd1	0.6251
Sds	1.408
Tx (s)	0.752
Ty (s)	0.19
Soil Type	C

General Information

Number of Span	2
Total Bridge Length (m)	56.6
Number Of Columns	2
Skew Angle (°)	0
Column Type	Semi-Circular
Avarage Column Height (m)	7.22
Column Concrete Strength fc (Mpa)	30
Column Rebar Strength Fy (Mpa)	420

Column Dimensions and Rebar Layout

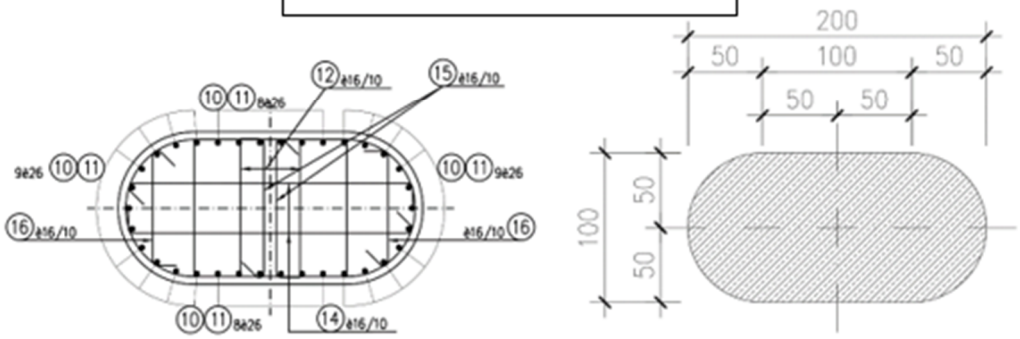

Longitudinal Rebar Ratio 1.01%

Splice Type is lap splice

Other Information

Cap Beam Width (m)	11.7
Cap Beam Thickness (m)	1.5
Foundation Thickness (m)	1.5
Single Column in Pier	NO

TOTAL COLUMN COST IS 109910 TL

Figure 3-10 Ticket of Bridge 10

Properties of Bridge 11

Drawing of Bridge

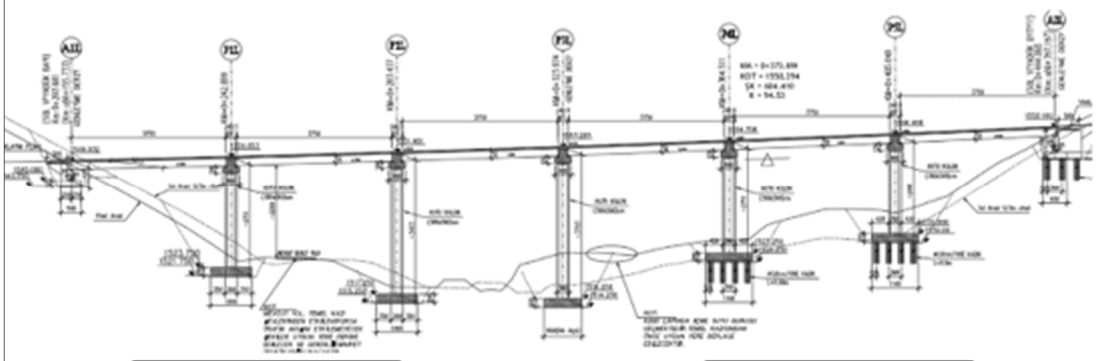

EQ Parameters

Designed EQ return Period (year)	475
Pga (g)	0.144
Sd1	0.1944
Sds	0.485
Tx (s)	1.881
Ty (s)	1.33
Soil Type	D

General Information

Number of Span	6
Total Bridge Length (m)	238.9
Number Of Columns	5
Skew Angle (°)	0
Column Type	Hollow
Avarage Column Height (m)	22.04
Column Concrete Strength fc (Mpa)	30
Column Rebar Strength Fy (Mpa)	420

Column Dimensions and Rebar Layout

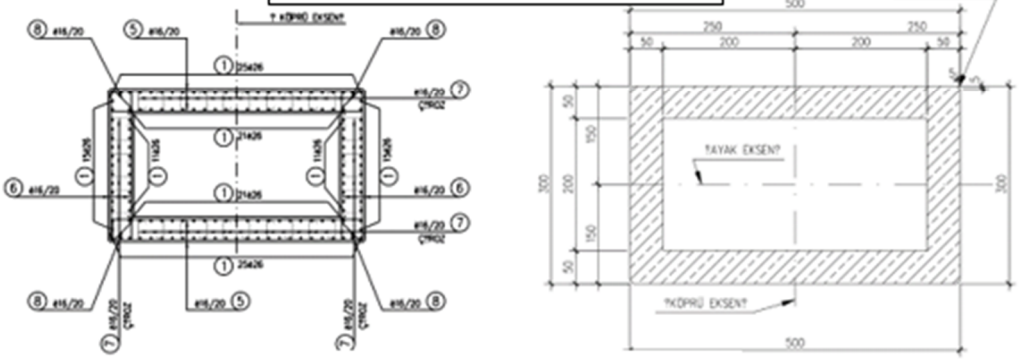

Longitudinal Rebar Ratio 1.09%

Splice Type is lap splice

Other Information

Cap Beam Width (m)	13.2
Cap Beam Thickness (m)	1.5
Foundation Thickness (m)	2
Single Column in Pier	YES

TOTAL COLUMN COST IS 2685516 TL

Figure 3-11 Ticket of Bridge 11

3.2 Results of Case Study Optimization

The approach proposed herein found more economical column designs for all 11 bridges in both scenario 1 and scenario 2. The program outputs of Bridge 1 calculated according to scenario 1 is given as an example in Figure 3-12 and Figure 3-13, and for all bridges both for scenario 1 and 2 optimum result outputs were added at appendices part. For Bridge 1, instead of the 2.8m diameter column with 1.15% longitudinal rebar ratio in the original design, a 2.2m diameter column with 1.15% longitudinal rebar ratio was designed. For Bridge 1, the optimum column result was reached at 2 iteration steps. The proposed iterative algorithm converged latest at fourth step in the case studies.

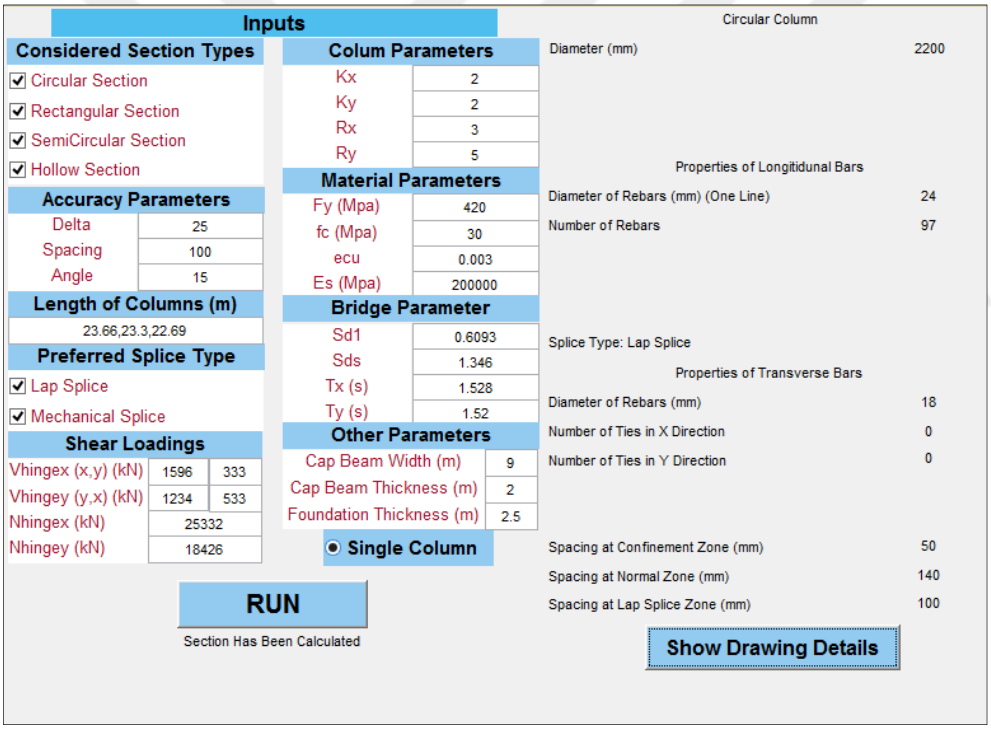

Figure 3-12 Optimized Column Result of Bridge 1

```
23.660m Length Column
Plastic Hinge Length is 3.950m
Joint Arrangement is 2.00m +   4 x4.50m +3.66m
Rebar Arrangement is 10.85m +   2 x5.95m +10.46m
23.300m Length Column
Plastic Hinge Length is 3.900m
Joint Arrangement is 6.00m +   3 x4.50m +3.80m
Rebar Arrangement is 10.35m +   2 x5.95m +10.60m
22.690m Length Column
Plastic Hinge Length is 3.800m
Joint Arrangement is 6.00m +   3 x4.50m +3.19m
Rebar Arrangement is 10.35m +   2 x5.95m +9.99m
Total Cost is around 590821 TL
```

Figure 3-13 Drawing details of optimized columns for Bridge 1

The total outputs the plastic region length, joint arrangement details and rebar arrangement details separately for each column as a text file as in Figure 3-13. The cross-section drawing of the optimized column is illustrated in Figure 3-14. The cost was 590821 TL for piers for a single bridge. Since this bridge consists of two parallel bridges of the same dimension side by side, the total cost was determined as 1181642 TL.

The total cost of the original columns of Bridge 1 is 2042137 TL as given in Figure 3-1. This corresponds to an over design cost of approximately 73% for the piers. By using this tool, 860495 TL could have been saved in column costs for this bridge.

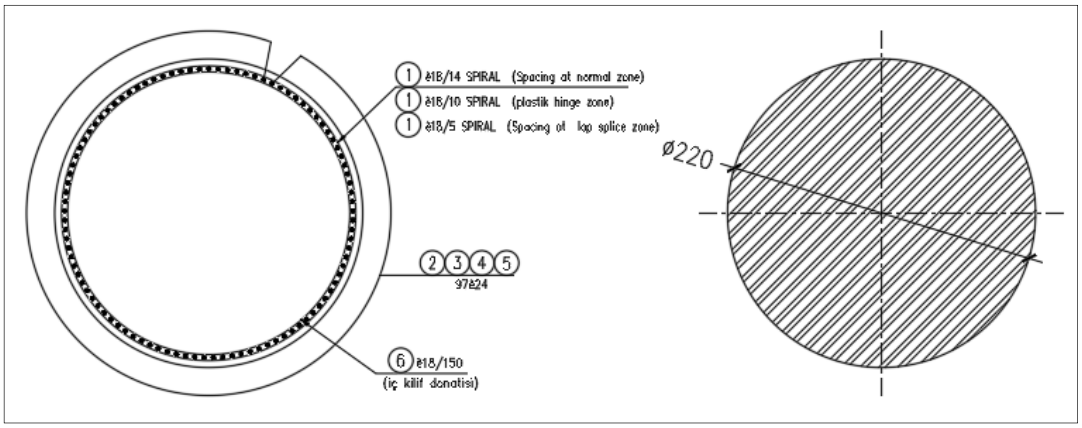

Figure 3-14 Column detail drawings of optimized Column for Bridge 1

In the next step, the cost distribution graphs between the alternatives of the columns that are found to be optimal is presented from Figure 3-15 up to Figure 3-36. There are hundreds of safe columns from the sections in the dataset for each bridge, but this tool chooses the most economical one as the final result. In order to show how all cost items contribute to the selection of the most economical column, in addition to the most economical column in each bridge, 19 other safe columns were selected and cost distribution graphs were obtained. For each bridge among the hundreds of safe column sections, 19 are selected to be able to reflect and summarize all safe column results. At least 4 section for each geometry type was used in demonstration. If possible, both the version of column with mechanical splice and without mechanical splices were selected. This helps to observe the effect of mechanical splicing on cost in the cost distribution graphs. However, in some bridge columns, mechanical splices were unnecessary due to the short length of the column. The selection was adjusted to cover the most economical and most expensive result in each geometry type.

These graphs are shown separately for both scenario 1 and scenario 2. In these graphs, the costs have been normalized, that is, the most economical column will be 100 unit costs, and the other alternative columns have been normalized to the same extent. The first part of the section ids specified on the horizontal axis in the graphics describes the section geometry, the second part describes the section number, and the third part describes, if any, the splice type between the longitudinal reinforcements. For example, in the Figure 3-15, “CS-1310-1” is seen in the first column, ‘’CS’’ notates that it is a circular section, ‘’1310’’ notates the number of section among the circular sections, and ‘’1’’ notates that the splice type is lap splice. If the last number would be 2, it means that a coupler was used instead of a lap splice. Figure 3-15 through Figure 3-36 show the ratio of concrete cost, transverse rebar cost, longitudinal rebar cost and mechanical splice cost on total column cost for each bridge optimization. Formwork cost was included in concrete cost.

It can be observed that generally circular section is more economic than the rest. Use of mechanical splices are more expensive than the lap splice, while semicircular

columns were more expensive than the rest. The ratio of transverse reinforcement cost to total column cost was smaller for circular columns compared to the other geometry types.

The most expensive item of circular sections is the longitudinal reinforcement with nearly %50 ratio to total cost. However, in the other geometry type ratio of longitudinal reinforcement to total column cost was %35 and the transverse reinforcement cost ratio was nearly identical with longitudinal. The cost results of this case study consisting of 11 bridges are shown in detail in the results section in comparison with the original project. Detailed comparative discussion of results is given in Chapter 5.

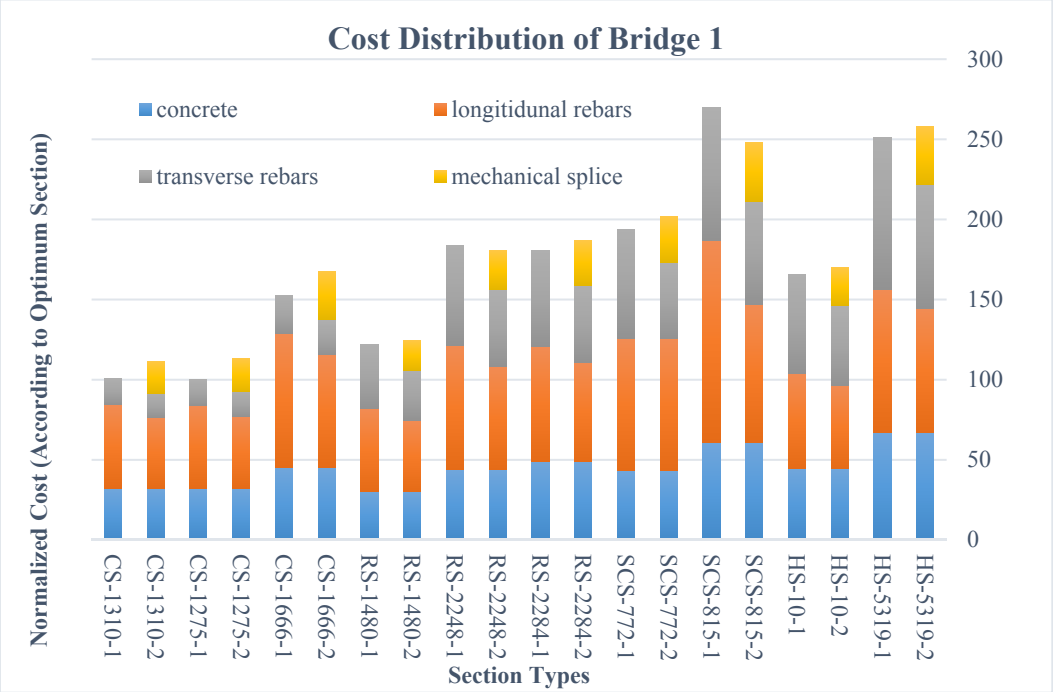

Figure 3-15 Scenario 1, Bridge 1 Optimum Cost is 1181642 TL

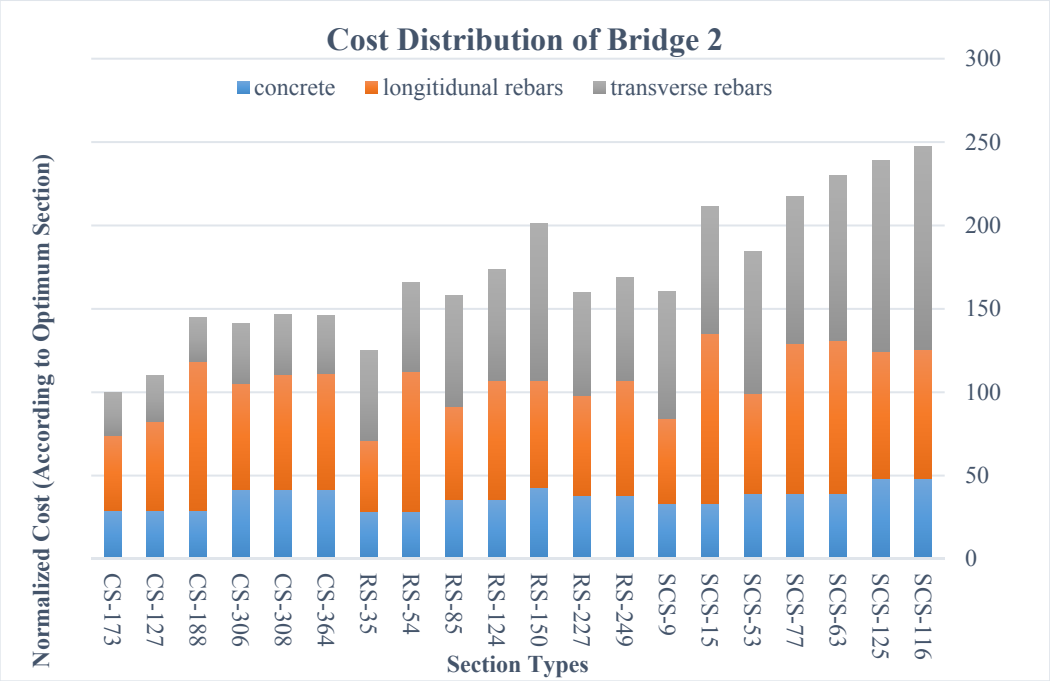

Figure 3-16 Scenario 1, Bridge 2 Optimum Cost is 38521 TL

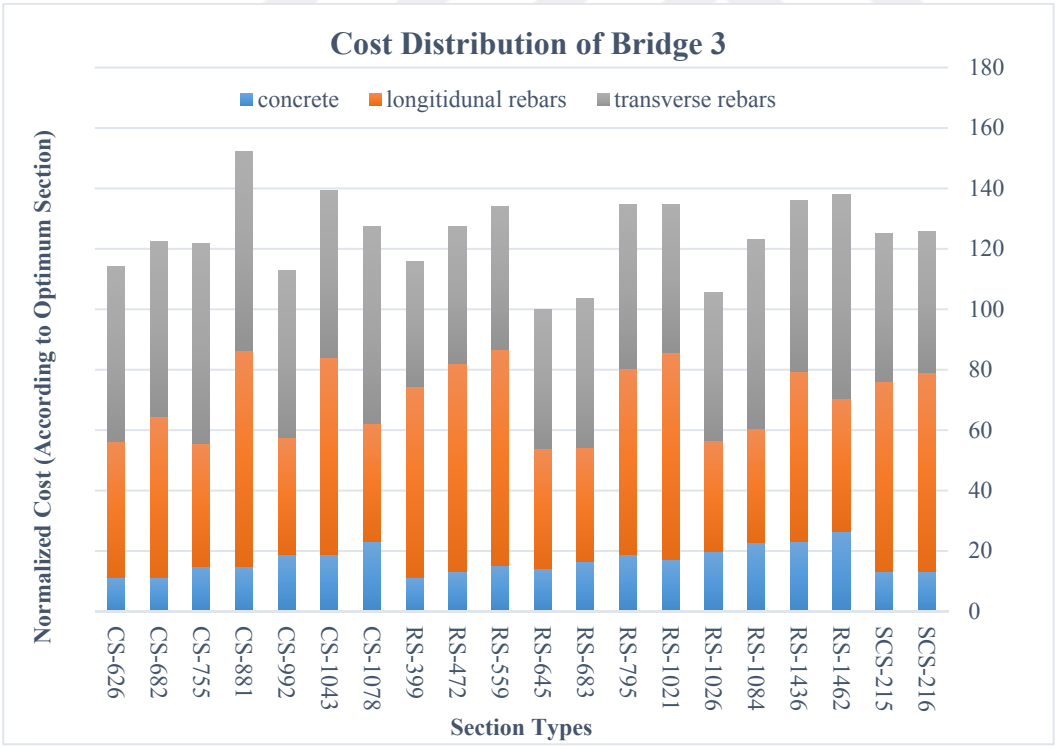

Figure 3-17 Scenario 1, Bridge 3 Optimum Cost is 448678 TL

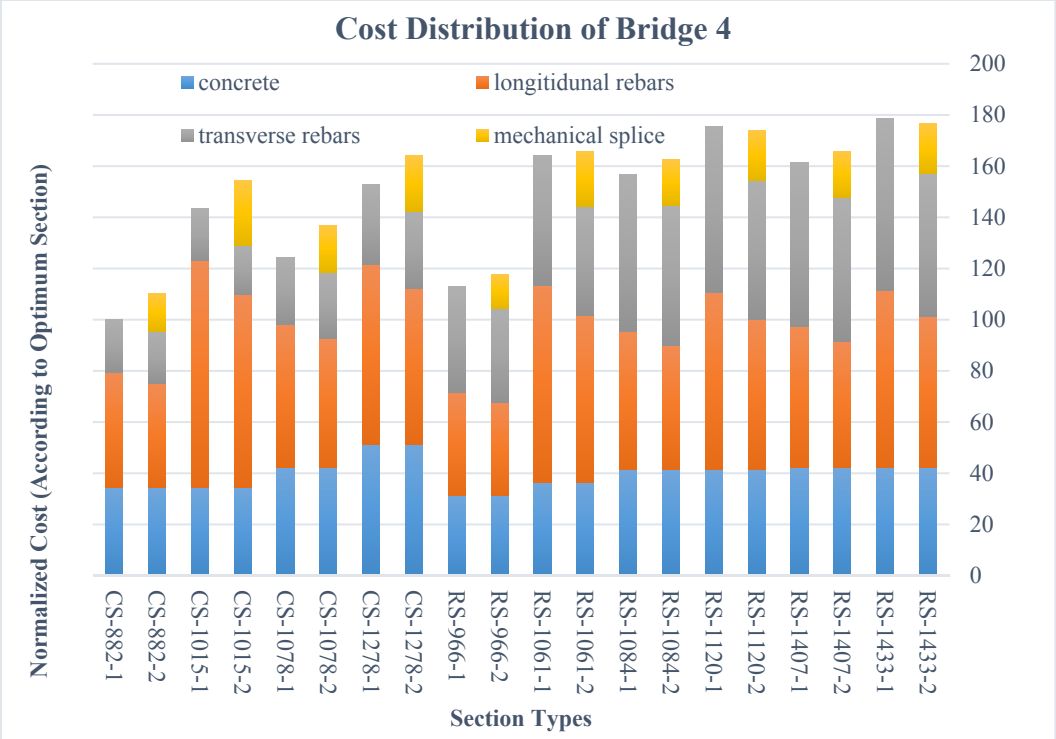

Figure 3-18 Scenario 1, Bridge 4 Optimum Cost is 1275783 TL

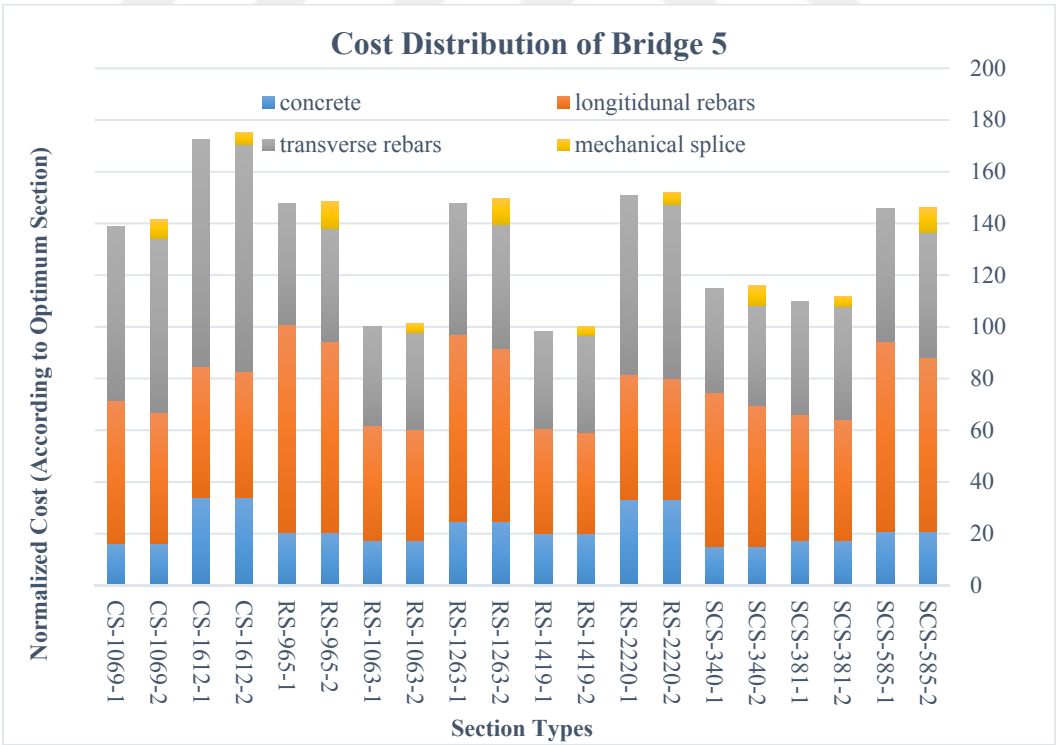

Figure 3-19 Scenario 1, Bridge 5 Optimum Cost is 1385004 TL

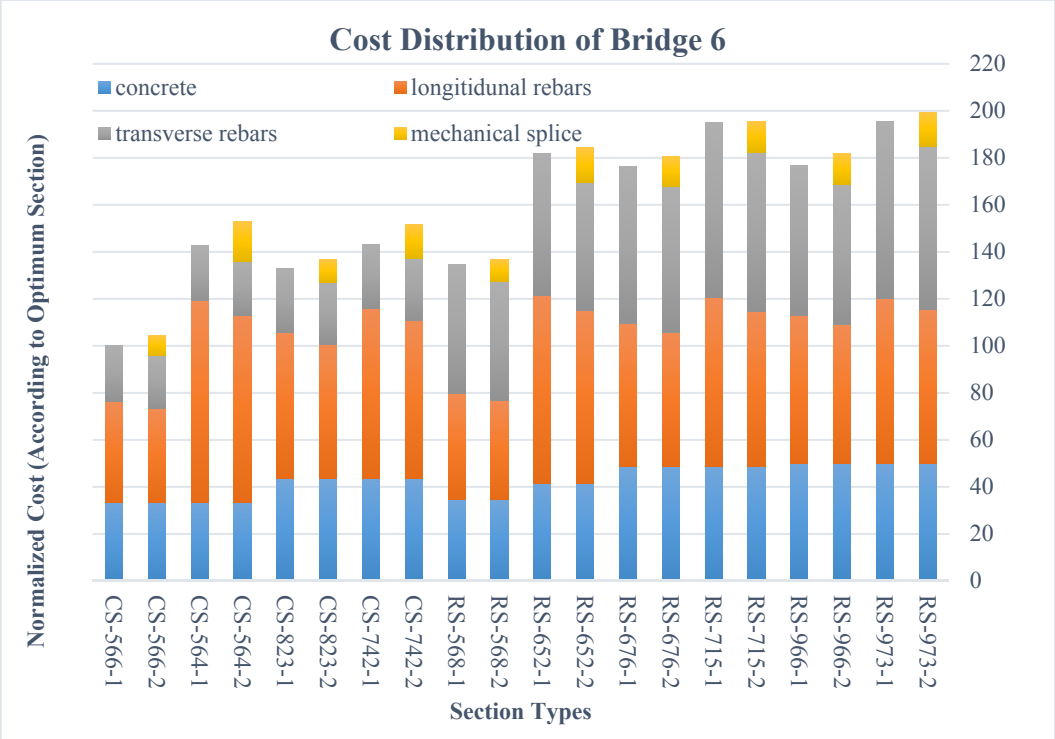

Figure 3-20 Scenario 1, Bridge 6 Optimum Cost is 490652 TL

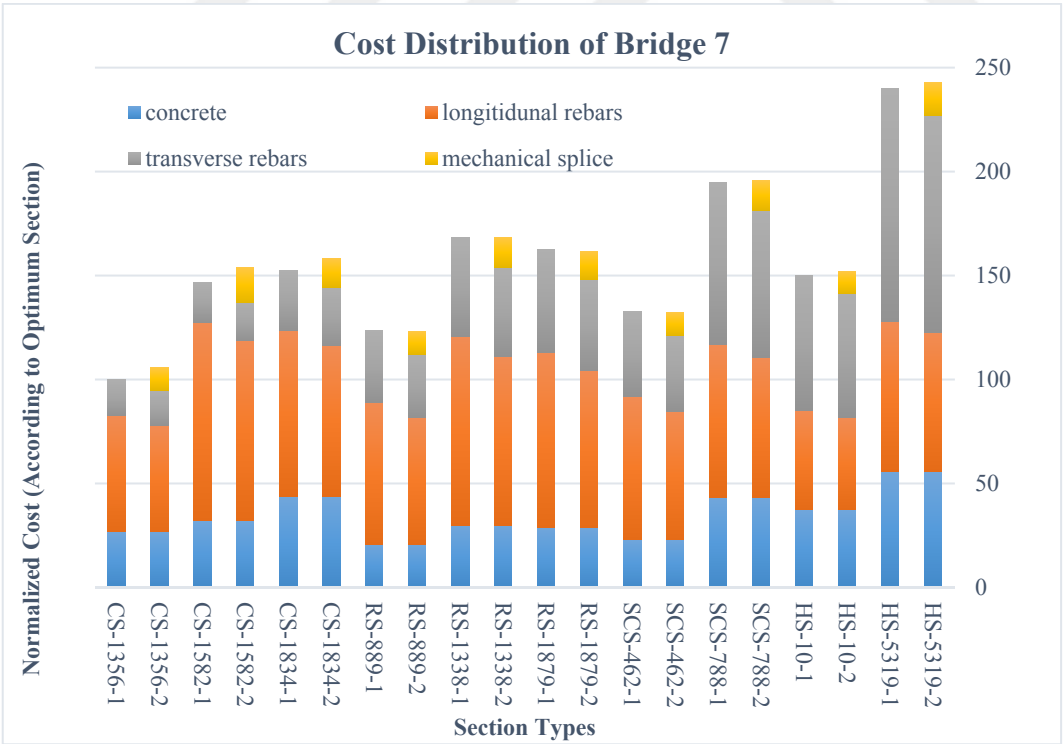

Figure 3-21 Scenario 1, Bridge 7 Optimum Cost is 1180088 TL

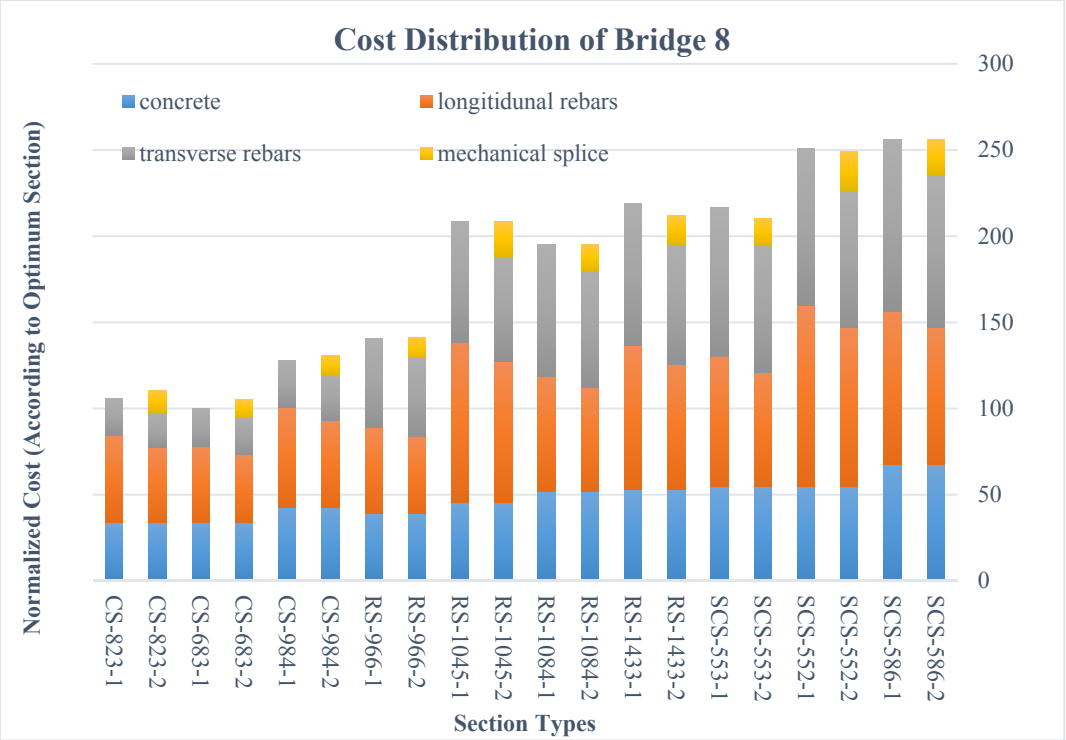

Figure 3-22 Scenario 1, Bridge 8 Optimum Cost is 497269 TL

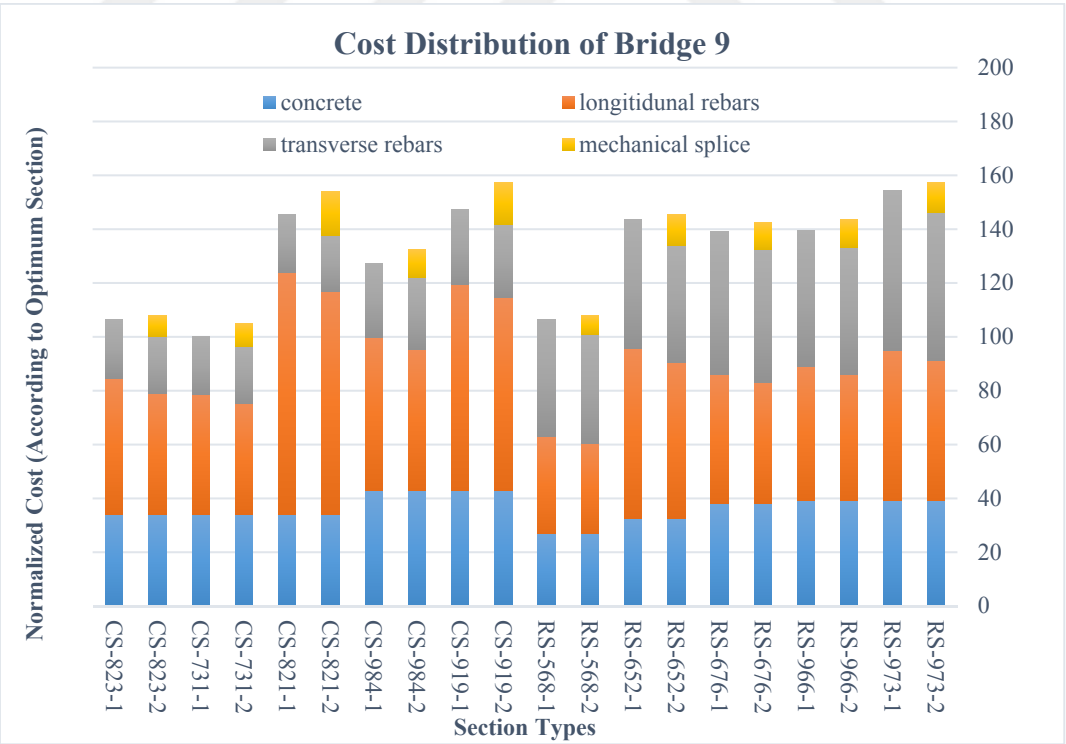

Figure 3-23 Scenario 1, Bridge 9 Optimum Cost is 417269 TL

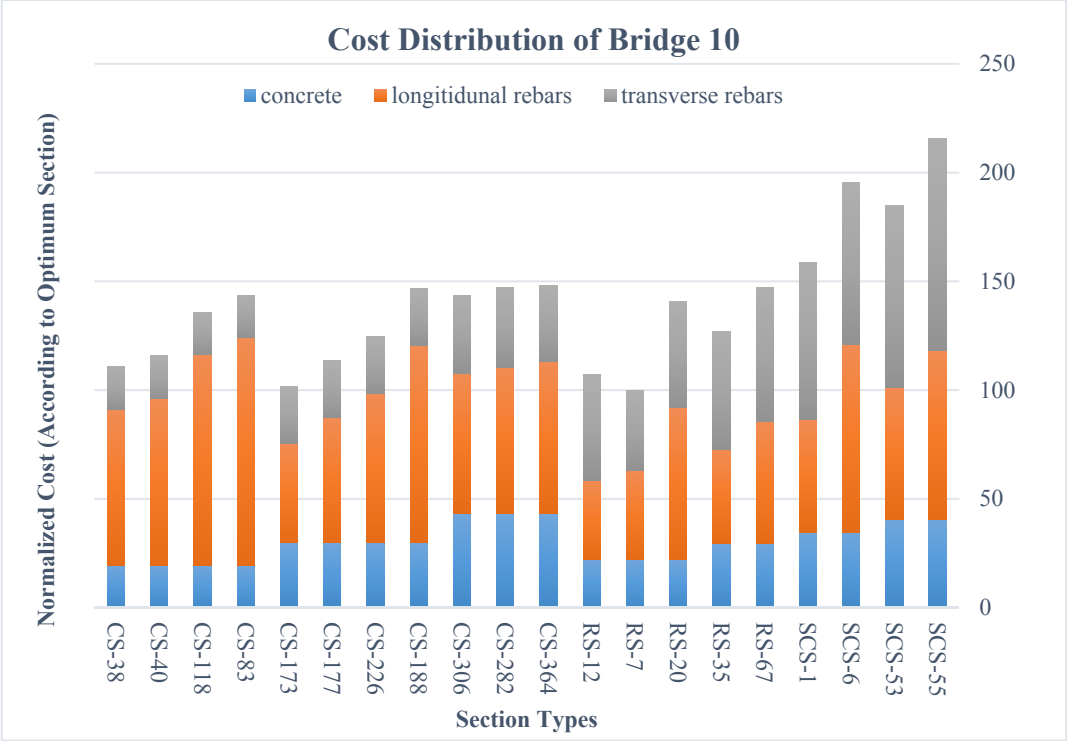

Figure 3-24 Scenario 1, Bridge 10 Optimum Cost is 27118 TL

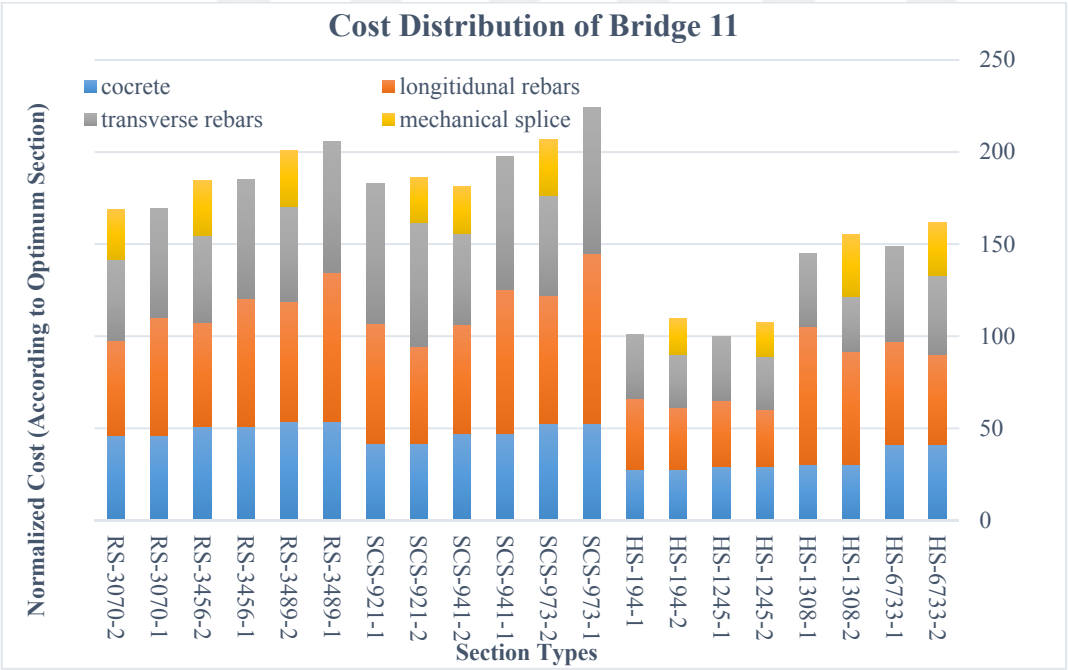

Figure 3-25 Scenario 1, Bridge 11 Optimum Cost is 2231606 TL

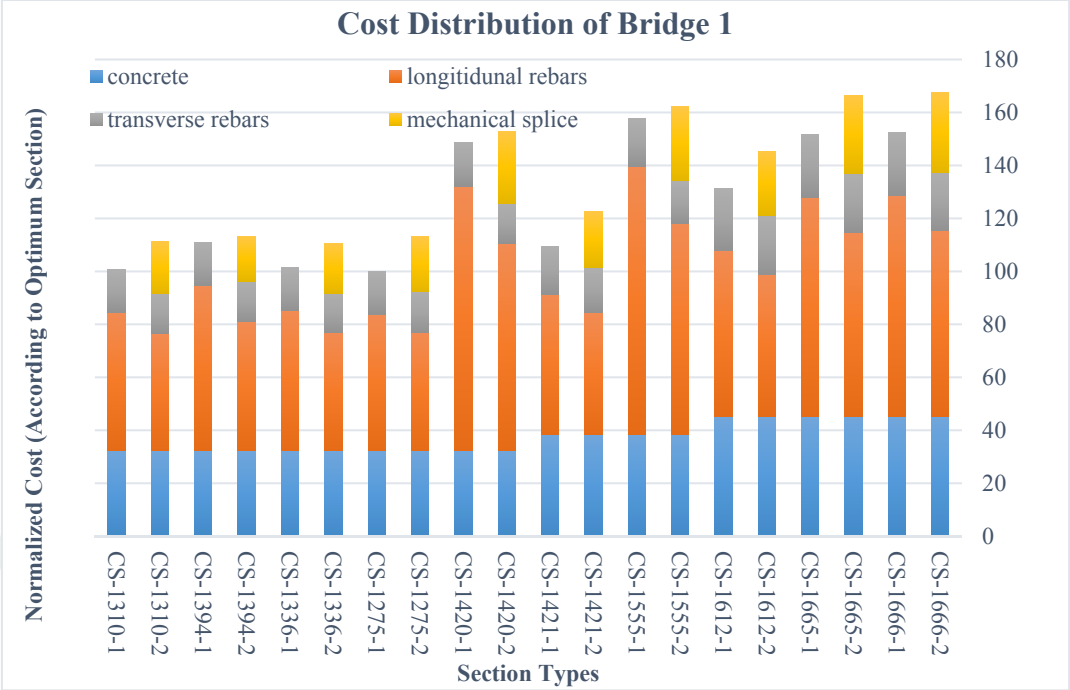

Figure 3-26 Scenario 2, Bridge 1 Optimum Cost is 1181642 TL

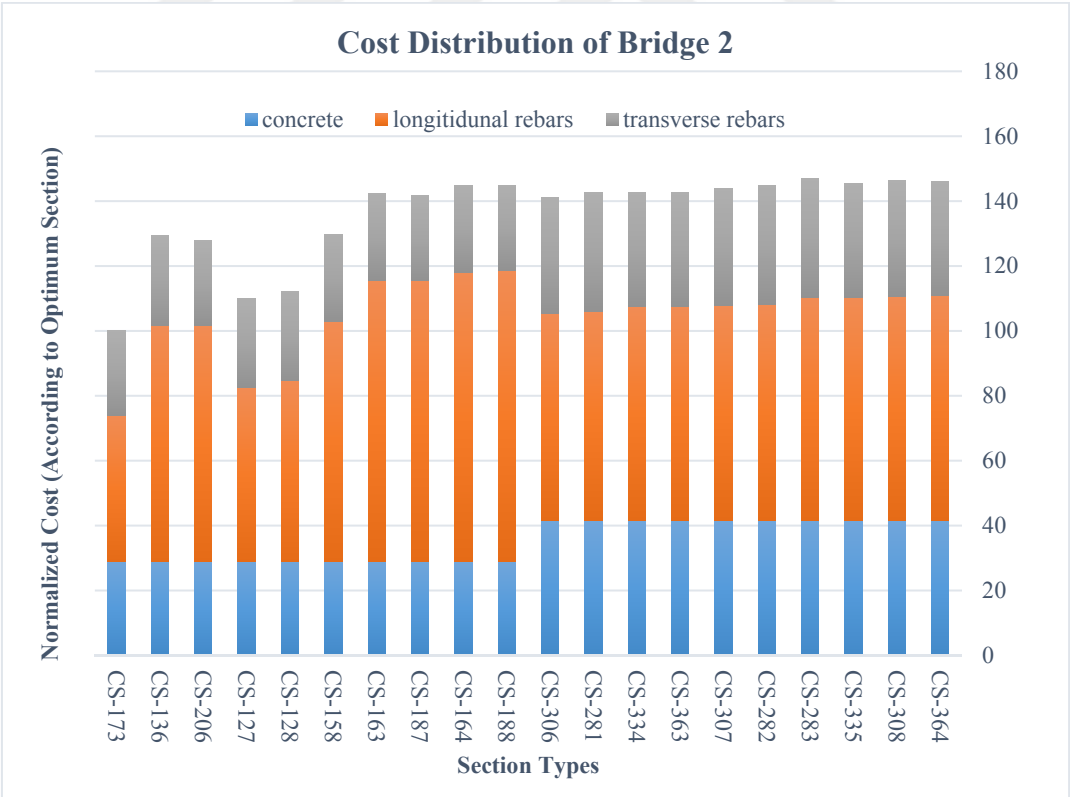

Figure 3-27 Scenario 2, Bridge 2 Optimum Cost is 38521 TL

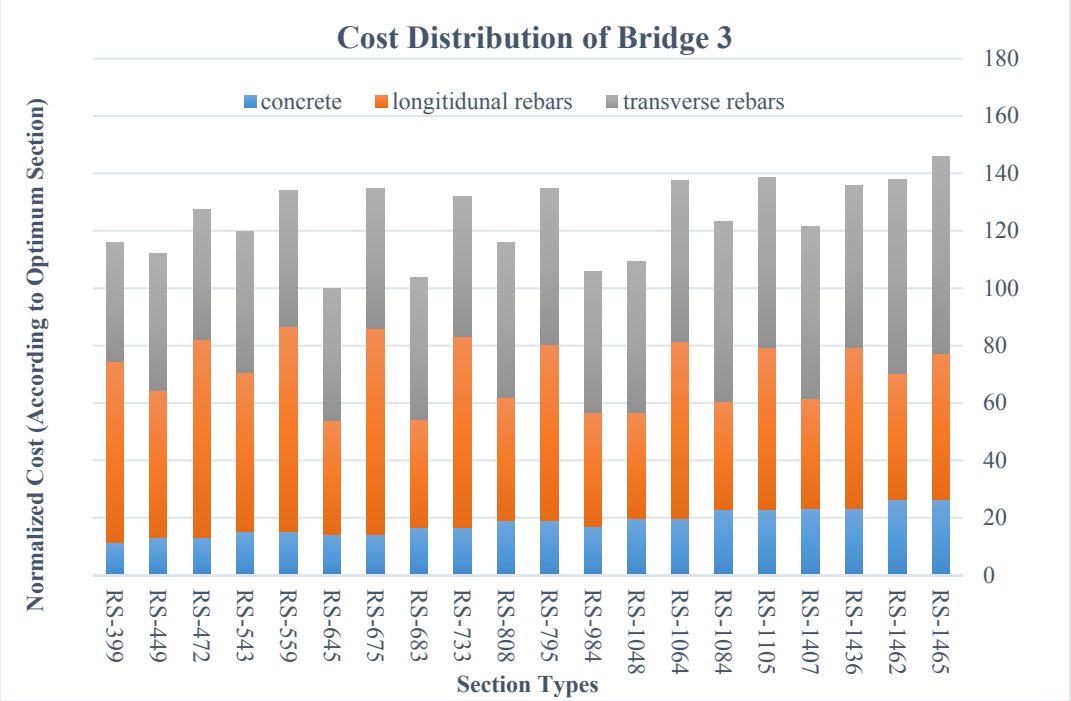

Figure 3-28 Scenario 2, Bridge 3 Optimum Cost is 448678 TL

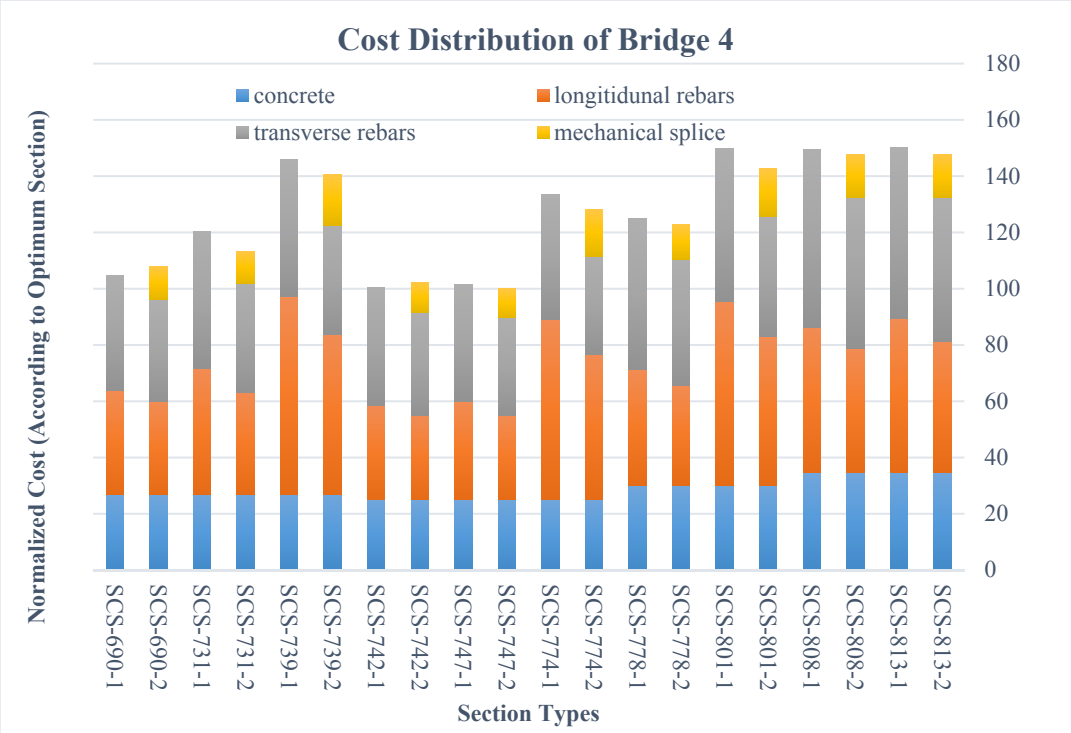

Figure 3-29 Scenario 2, Bridge 4 Optimum Cost is 3530443 TL

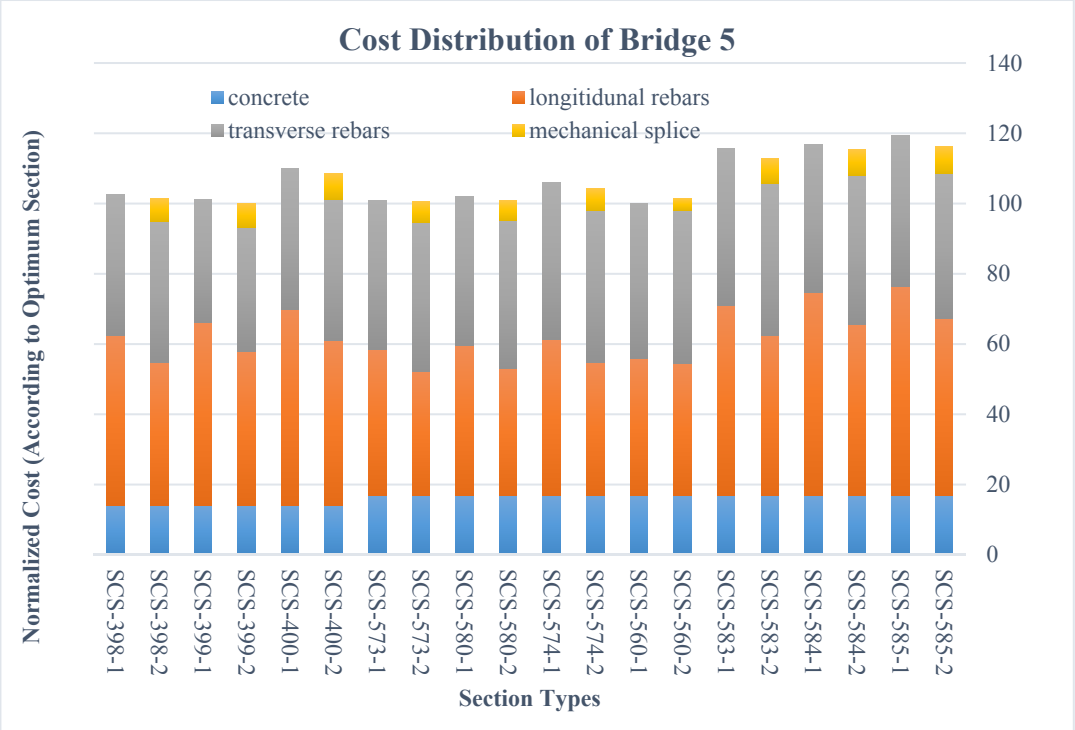

Figure 3-30 Scenario 2, Bridge 5 Optimum Cost is 1709730 TL

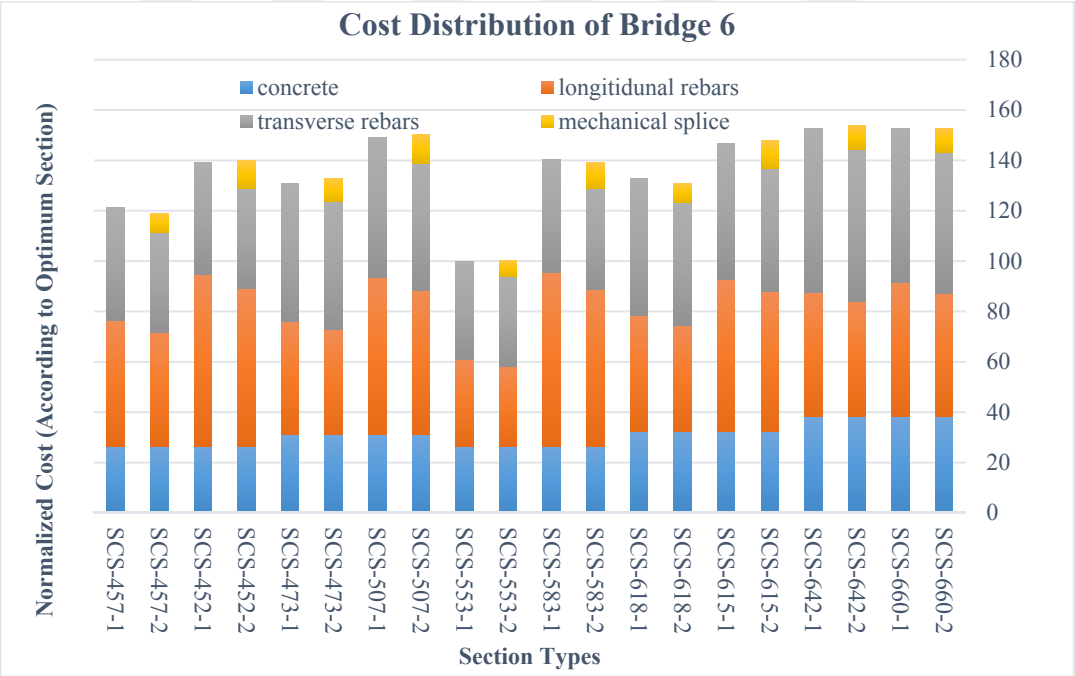

Figure 3-31 Scenario 2, Bridge 6 Optimum Cost is 1322984 TL

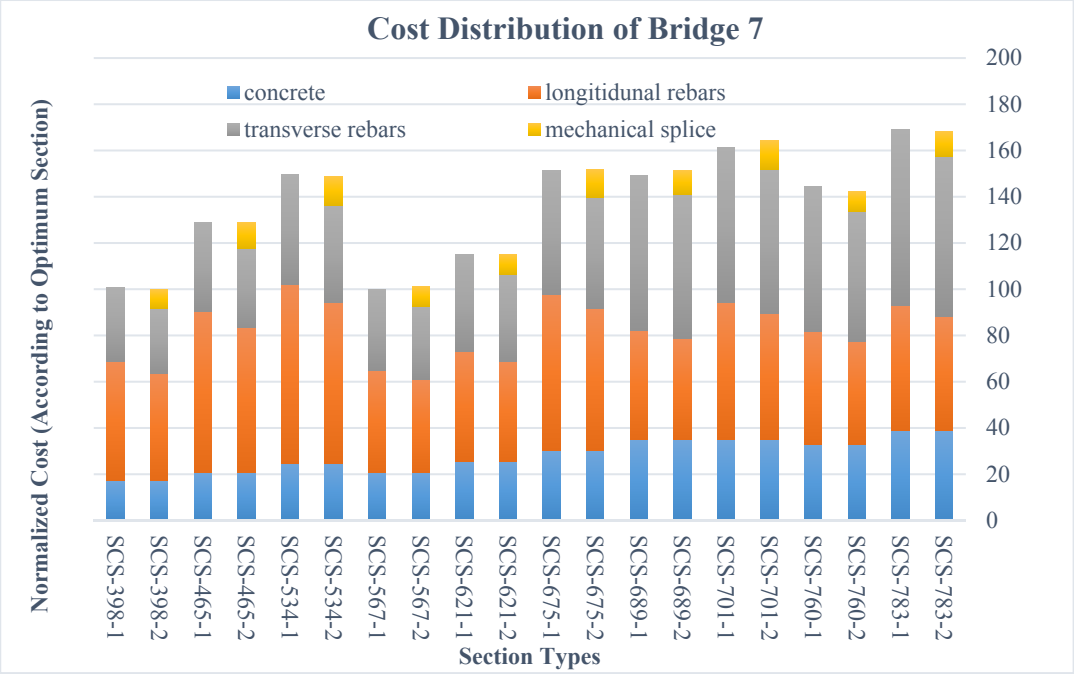

Figure 3-32 Scenario 2, Bridge 7 Optimum Cost is 1312184 TL

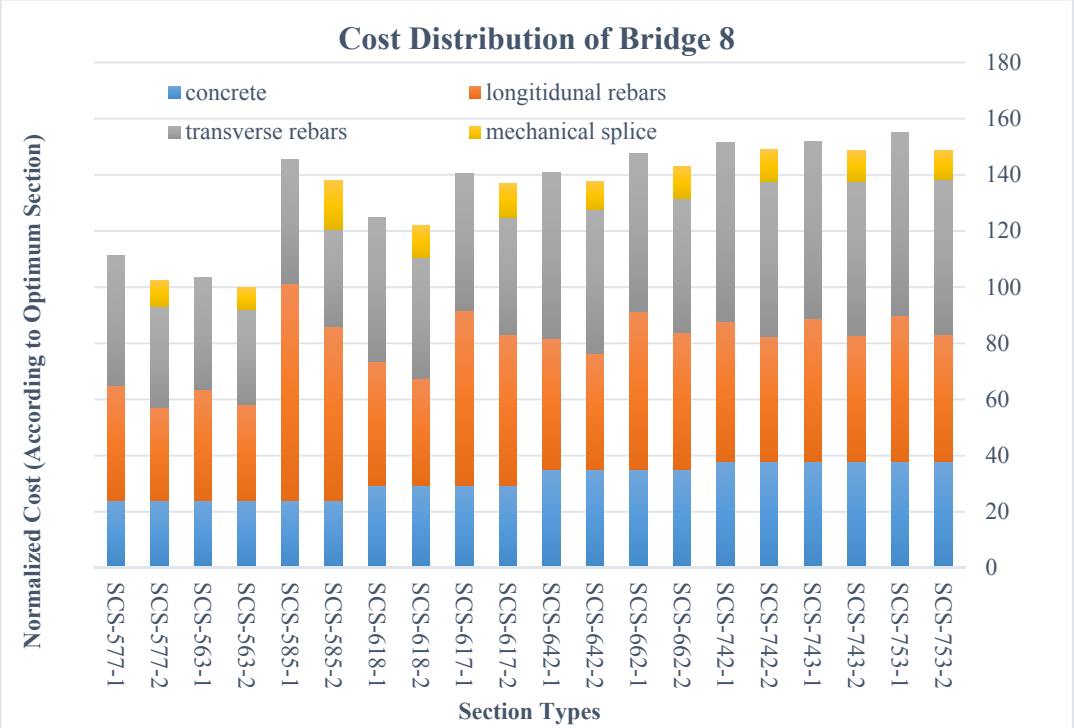

Figure 3-33 Scenario 2, Bridge 8 Optimum Cost is 1137155 TL

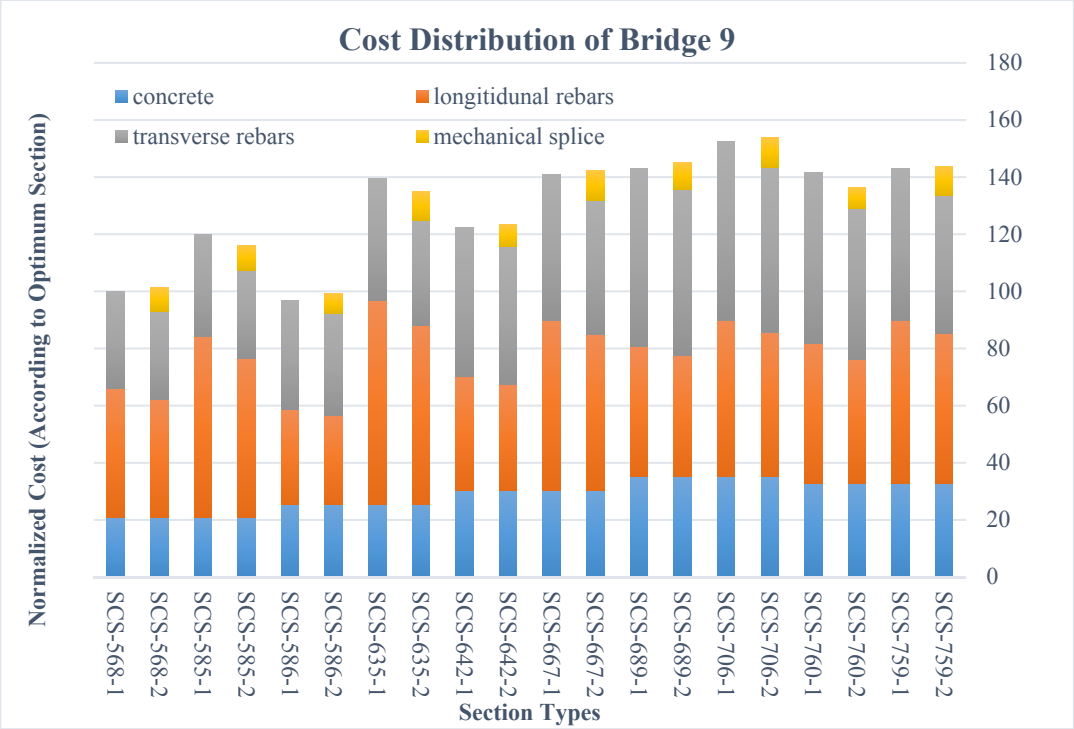

Figure 3-34 Scenario 2, Bridge 9 Optimum Cost is 1108489 TL

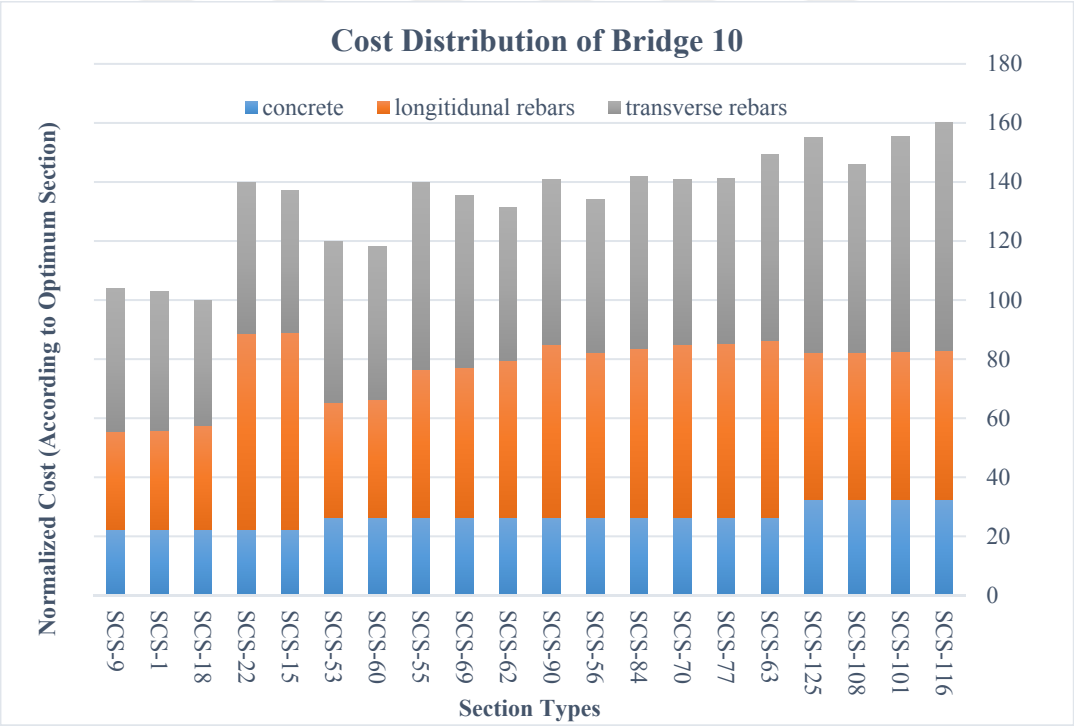

Figure 3-35 Scenario 2, Bridge 10 Optimum Cost is 41869 TL

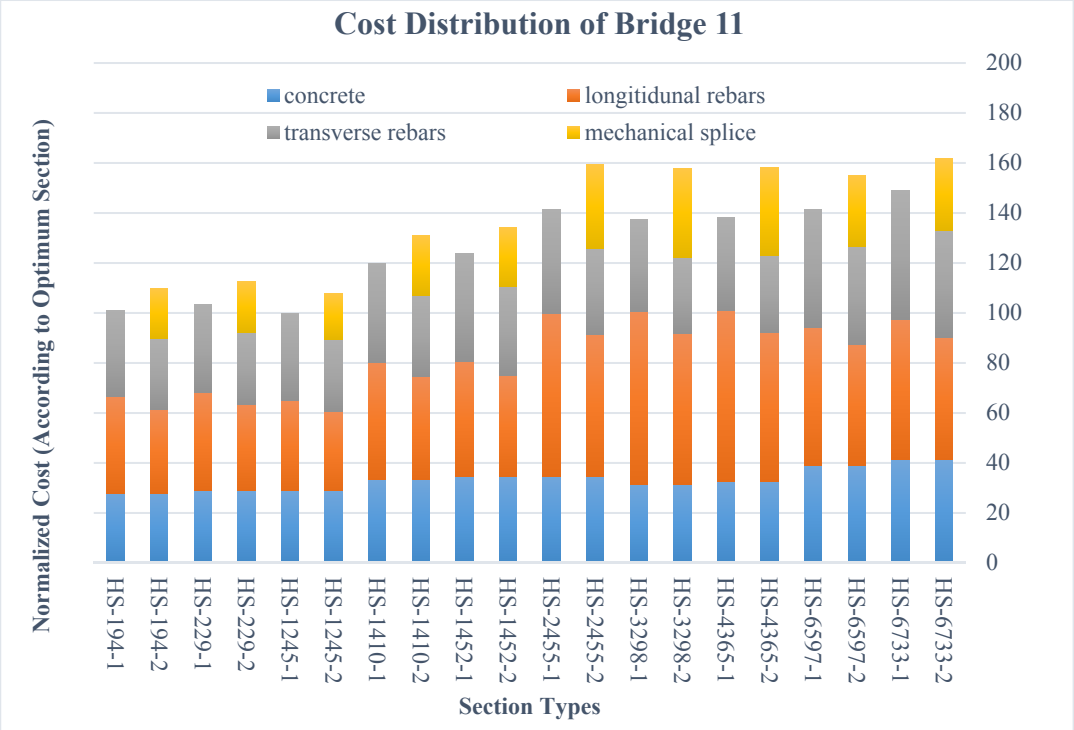

Figure 3-36 Scenario 2, Bridge 11 Optimum Cost is 2231606 TL

CHAPTER 4

EXPECTED SEISMIC PERFORMANCE OF OPTIMIZED BRIDGES

4.1 Introduction

In this section, the performance of the optimized bridges will be examined. In the AASHTO, the design of standard highway bridges is based on load and resistance factors without explicit performance check. In other words, the bridge column optimizer tool performs its design according to AASHTO without requiring any other control. However, the performance levels of the optimized new columns are checked in accordance with the Turkish Bridge Earthquake Specification (TBES,2020). As noted in Section 1.3, this specification requires performance analysis of many bridge types, including most standard highway bridges.

The original and optimized versions of 3 of the bridges in the case study are examined in terms of their performance according to Turkish specifications. Bridge performances are examined in both the longitudinal and transverse directions. Different analysis method options are presented depending on the bridge type as the 2nd order analysis methods in the Turkish specification. All 3 bridges chosen are suitable for performance evaluation with the Pushover analysis method. SAP2000 software was used in the Pushover analysis of these 3 bridges. Displacement controlled nonlinear static analysis method was preferred. Effective inertia of the column cross-section was used in these analyses. Hinges are defined to the lower and upper connection points of the bridge columns by calculating the plastic hinge length of the columns. In order to specify these hinge properties, P-M and M-Φ[8] (for several axial load) capacity diagrams are defined separately for the longitudinal and

[8] Φ=Curvature (1/m)

transverse directions in the program. For P-M calculation, sPColumn, for M-Φ calculation Xtract programs were used. As stated in the specification, an over strength factor of 1.3 for concrete and 1.2 for rebar was applied in capacity calculations. Mander confined concrete model was used to calculate M-Φ capacities of section as suggested in TBES.

For these 3 bridges, the performance target is collapse prevention according to TBES. M-Φ calculations are also calculated according to the strain values determined as the limit for this performance target. Moreover, the bridge performance under service level earthquake will be evaluated in section 4.3 considering gravity loads and service level earthquakes.

4.2 Calculations and Results of Performance Analysis

Performance analysis was conducted for bridges 8, 10 and 11. Capacity diagrams for bridge 8 are shown in Figure 4-2, Figure 4-3 and Figure 4-4, while for the other two bridges only the final performance results will be presented.

The column cross-section of the original version of Bridge 8 is as in Figure 4-1 and the calculated P-M diagram of this cross-section is shown in Figure 4-3 for both directions. M-Φ capacity calculations can be made using the section parameters shown in Table 2-4. M-Φ_x in Figure 4-4 and M-Φ_y in Figure 4-5 are given for the original column section.

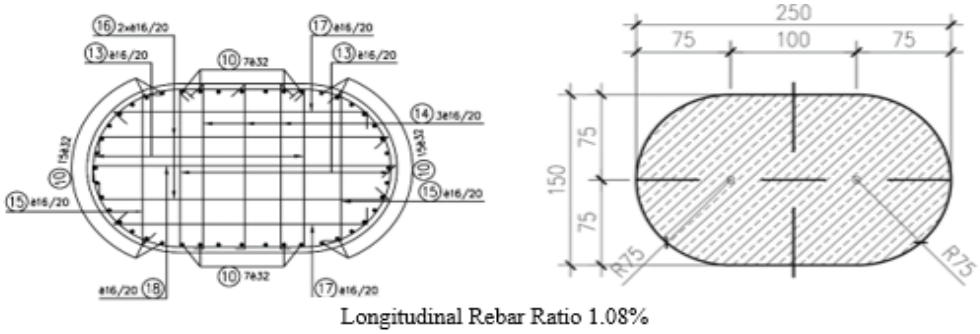

Figure 4-1 Bridge 8 original column geometry and rebar layout

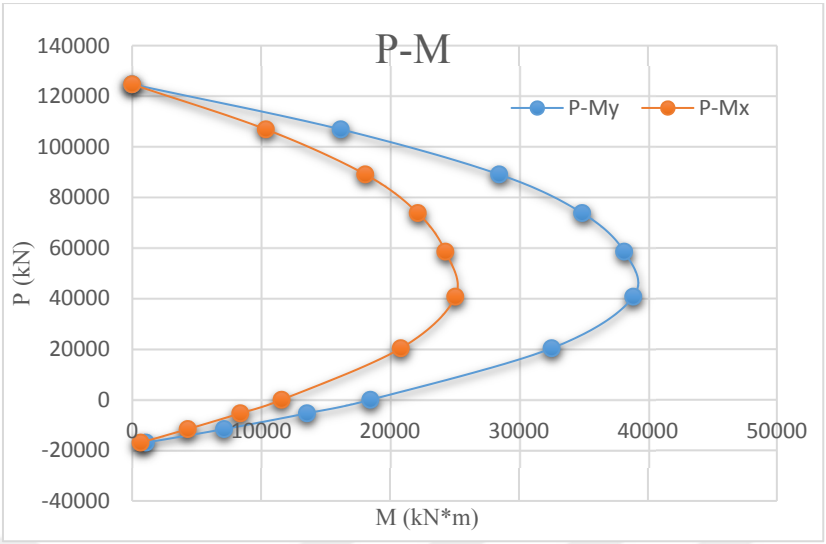

Figure 4-2 P-M_x & P-M_y of Bridge 8 original column

Table 4-1 Parameters for confined concrete model

p_s	k_e	w_s	s (mm)	e_{cu}(GÖ)
0.0137	0.8822	0.1766	100	0.0129

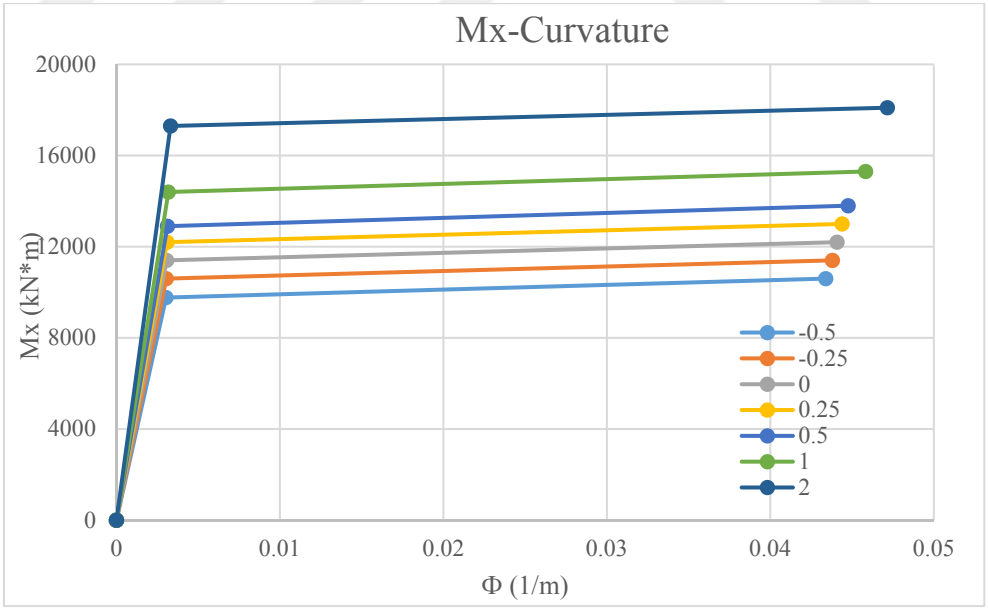

Figure 4-3 Mx-Φ of Bridge 8 original column (indicators show ratio of axial to dead load)

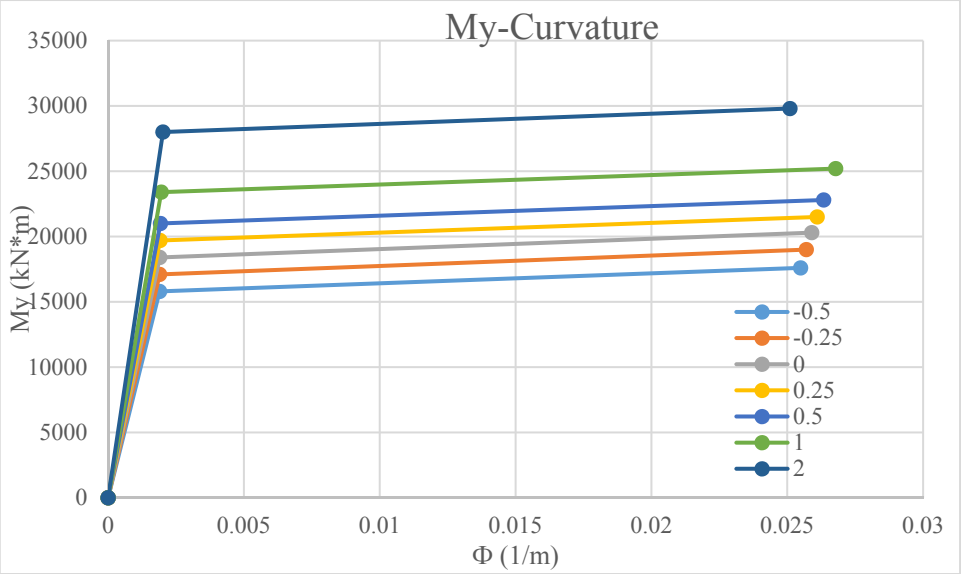

Figure 4-4 My-Φ of Bridge 8 original column (indicators show ratio of axial to dead load)

Similarly, M-Φ calculations and P-M calculations were also conducted for the optimum cross section. By using these calculated hinge properties in pushover analysis, the following base shear column and column tip deflection graphs from Figure 4-5 to Figure 4-10 are obtained. These graphs are drawn by normalizing the displacement to the maximum column tip displacement and maximum column base shear force to the original bridge shear. The performance levels stated at the graphs were determined based on strain limits defined in TBES.

The pushover analysis results along with the performance points and limits are shown in Figures 4-5 to Figures 4-10. It can be observed that all bridges in all direction satisfy the limited damage performance level. This can be attributed to the safe selection of R factors (Table 1-5) AASHTO based design. In this way, both the as built and optimized bridges are expected to suffer minimum damage under the design earthquake. In fact, it can be stated that AASHTO's R factors are too conservative according to TBES second stage performance design. There is even room for further optimization based on performance limit according to TBES. Such an optimization is outside of the scope of this study because this study is based on AASHTO and this conservatism is kept as a safeguard to protect these crucial structures.

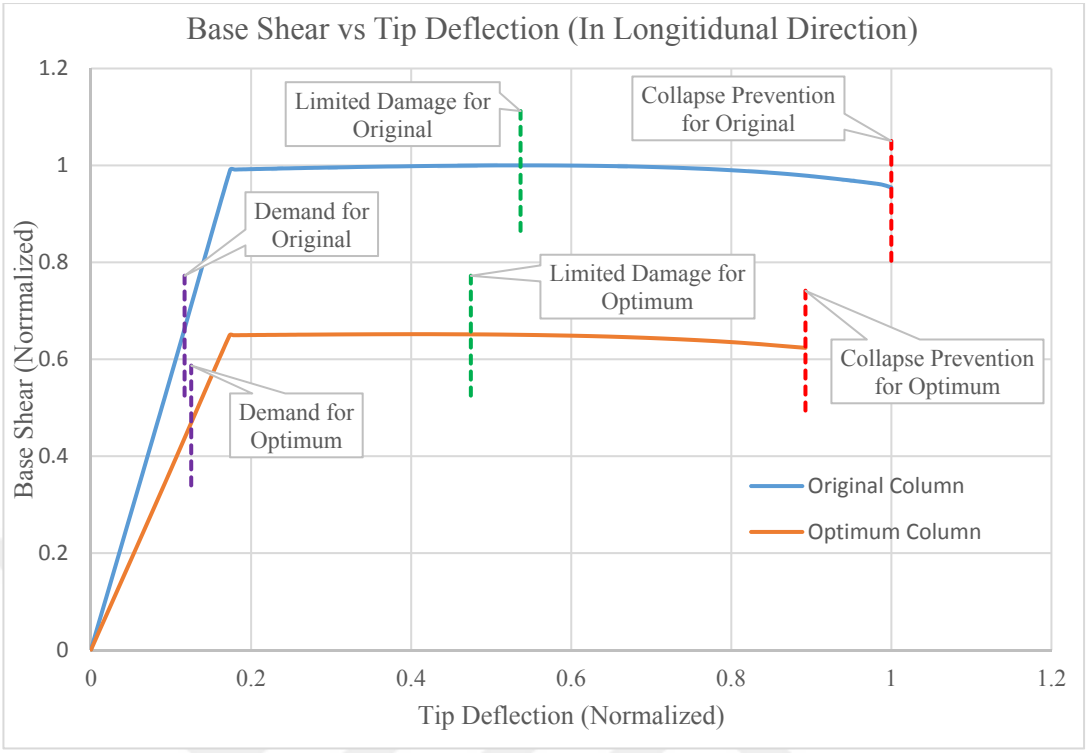

Figure 4-5 Base shear and column tip deflection graph in longitudinal direction for Bridge 8

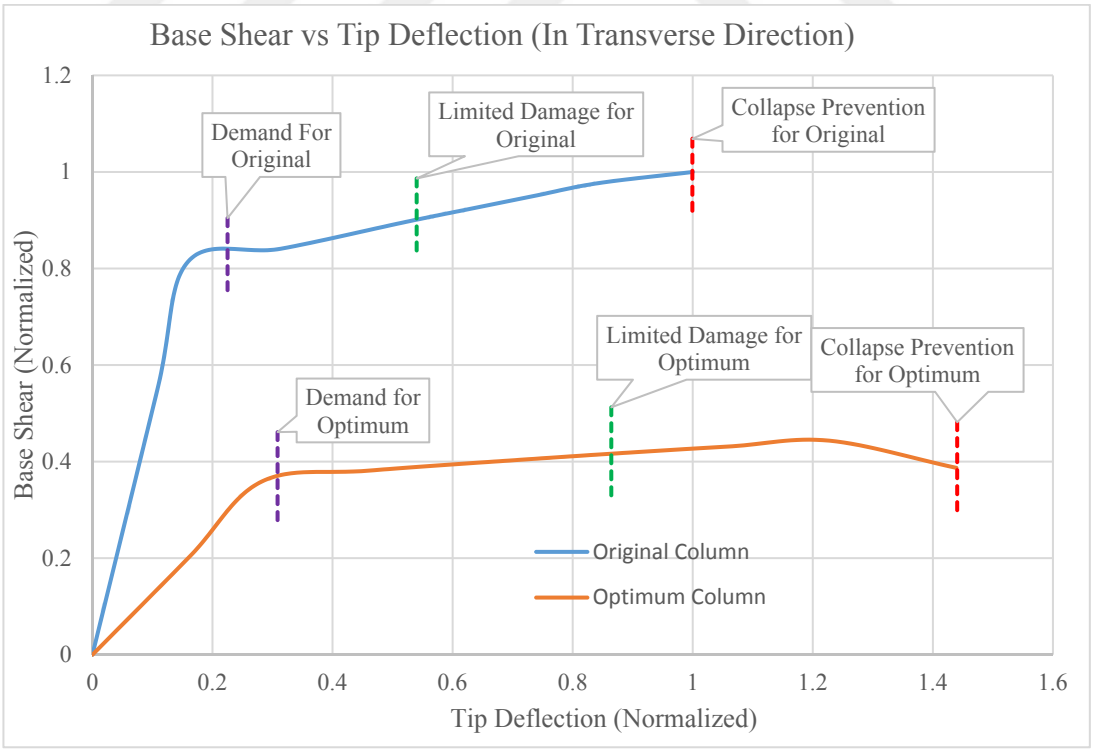

Figure 4-6 Base shear and column tip deflection graph in transverse direction for Bridge 8

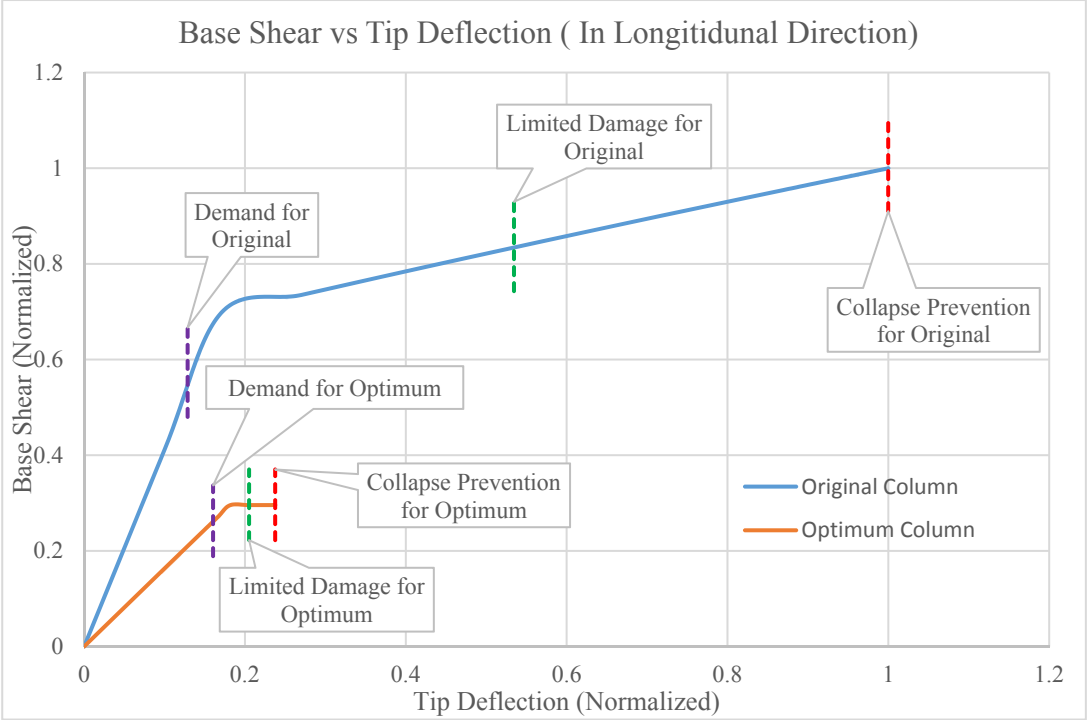

Figure 4-7 Base shear and column tip deflection graph in long. direction for Bridge 10

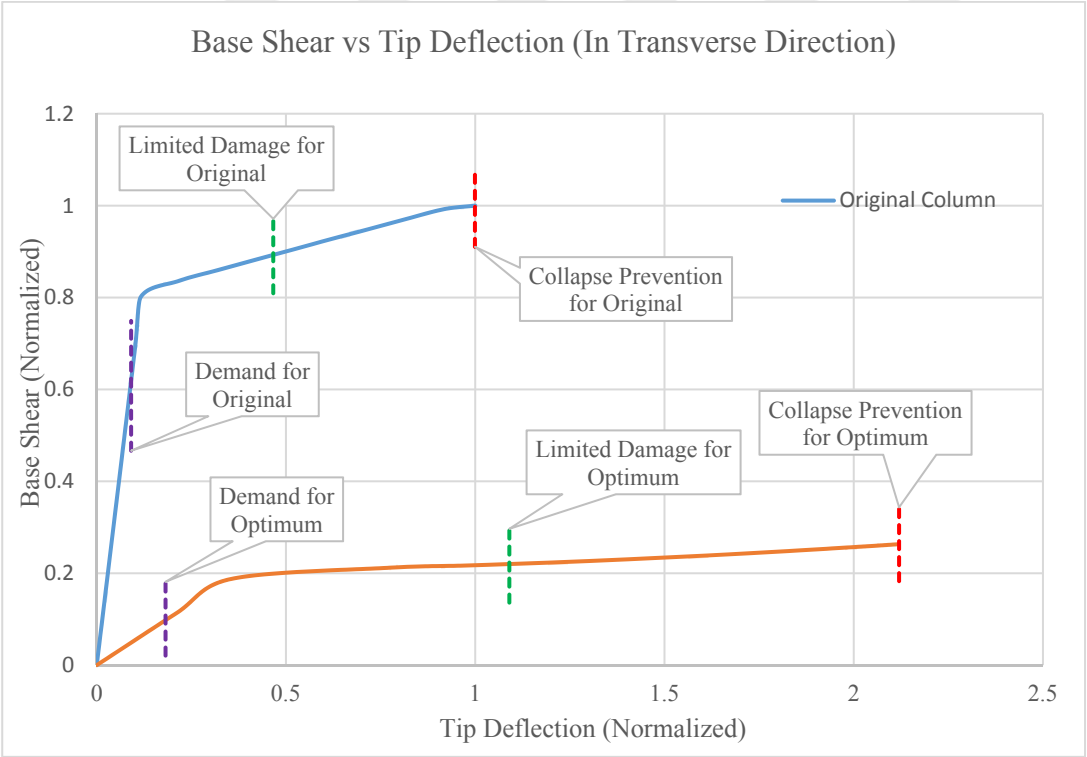

Figure 4-8 Base shear and column tip deflection graph in transverse direction for Bridge 10

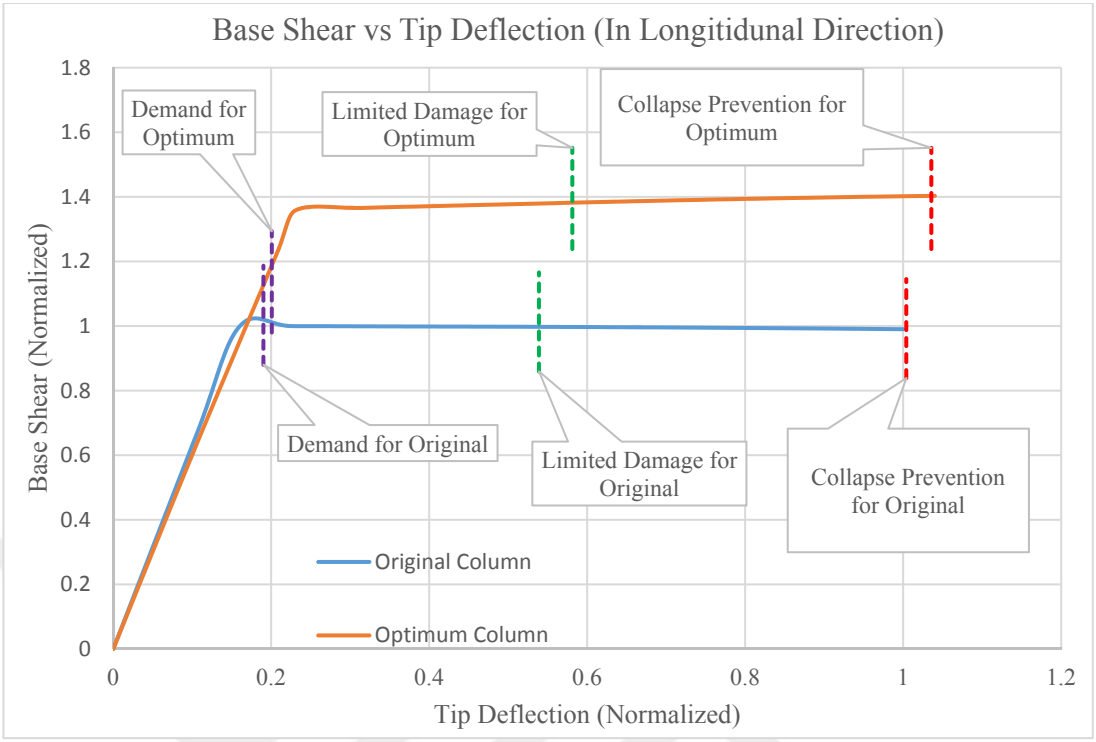

Figure 4-9 Base shear and column tip deflection graph in long. direction for Bridge 11

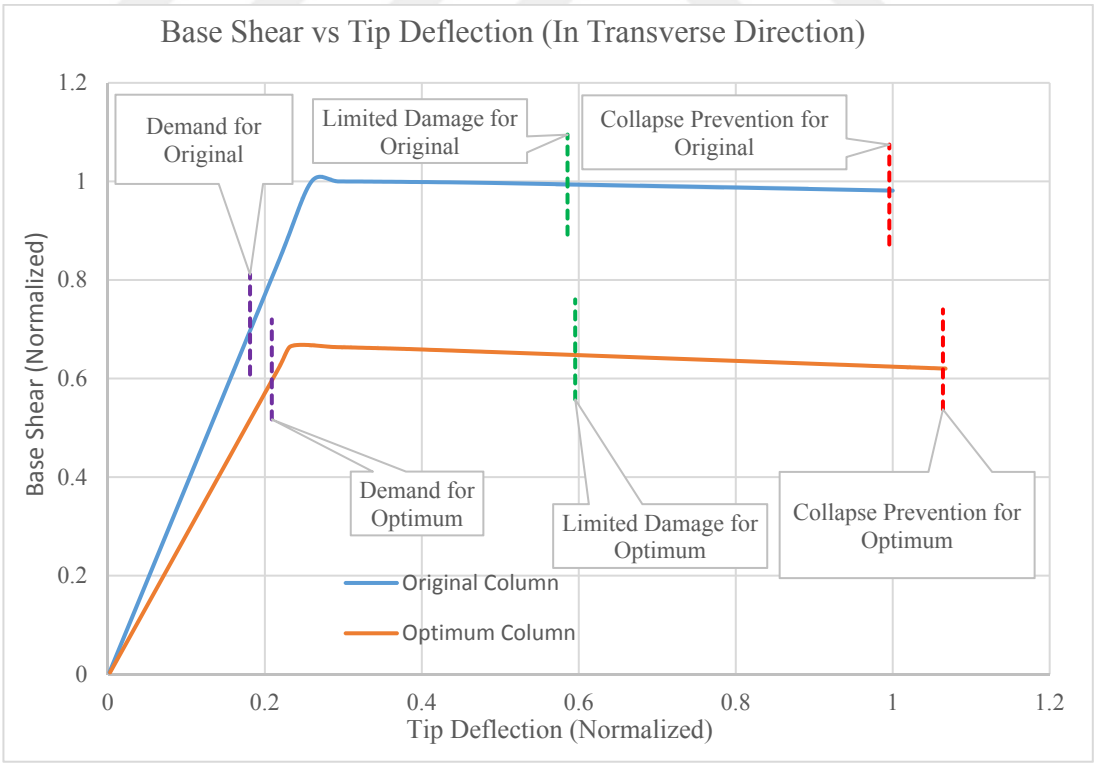

Figure 4-10 Base shear and column tip deflection graph in transverse direction for Bridge 11

4.3 Performance Under Service Level Earthquake

Seismic performance evaluation for frequent earthquakes which can be considered as service level earthquake is required neither in AASHTO LRFD nor in TBES. On the other hand, ASSHTO defines a spacing limit for mild steel reinforcement in the layer closest to the tension face to avoid excessive crack width. This limit depends on the stress on the tension reinforcement at the service load combination. AASHTO service load combination includes only dead, live and wind loads. These loads usually do not create significant moment demands to exceed the cracking moment capacity of standard highway RC bridge piers.

The crack width evaluation can be a reasonable approach to evaluate the service performance of optimum designed piers by the proposed tool and the as-built bridge piers under service level earthquake. For this purpose, three bridges used before were used for comparison. The demands used for comparison were obtained from the response spectrum analysis under the DD-3 earthquake ground motion level. The bridges were analyzed in both longitidunal and transverse directions. Crack width calculations were performed according to Gergerly-Lutz expression which is also available in TS-500 (2000) in a slightly modified form.

$$W_{max} = \left(1.1 * \beta * f_{scr} * \sqrt[3]{d_c * A}\right) * 1E^{-5} \ (in\ mm) \qquad (4.1)$$

where;

f_{scr}=stress in reinforcing bar at crack (elastic analysis)

d_c=distance from extreme tension fiber to center of closest bar

A= effective concrete area per bar (Total area of concrete in tension which has the same centroid as the tension reinforcement divided by the number of the equivalent largest size bars)

β=ratio of distance from tension steel to NA to distance from extreme tension fiber to NA

Accordingly; the calculated crack widths for the as-built and optimized bridges under gravity loads and D3 level earthquake are presented in Table 4-2.

As given in Table 4-2, cracking is not expected for bridge 11 for both optimum and as-built piers since the moment demands did not exceed the cracking moment capacity of the sections. However, for the rest of the systems except for the bridge 8 in transverse direction, the maximum crack widths were calculated larger for the optimum section compared to the existing pier. For the bridge 8 in transverse direction, DD-3 demands are quite smaller for optimum piers because the period of structure was increased in transverse direction. Except for this case, the optimized piers maximum crack widths increased around 15% compared to the as-built section. It should be mentioned that neither AASHTO or TBES require such calculations of crack widths under service level earthquakes. Both the as-built and optimum design piers are expected to have crack width above the expected limit of 0.3 mm. The durability aspects of cracked bridges under service level earthquakes and optimization including cracking and durability is beyond the scope of this study.

Table 4-2 Predicted crack width for selected bridges under service level earthquake

	Bridge 8		Bridge 10		Bridge 11	
Crack Direction	Original	Optimum	Original	Optimum	Original	Optimum
In Long. Direction	0.47	0.56	0.61	0.69	No Crack	No Crack
In Trans. Direction	0.60	0.45	0.40	0.44	No Crack	No Crack

CHAPTER 5

COMPARISON OF RESULTS

In this chapter, the costs of the optimized cross-sections for the selected bridge piers are compared with those of the as-built systems and the results are discussed in detail. First, scenario 1 optimization, that is, the optimization results conducted by including all section types such as circular sections, rectangular sections, semi-circular sections and hollow sections is presented. Then, optimization scenario 2, that is, the optimization made only among the sections with the same geometry type with original column section, is presented.

5.1 Results of Scenario 1

For the 11 bridges in the case study, the most economical bridge column was found among the 14630 sections with different section geometry and reinforcement layout in the dataset. The cross-sectional drawings of the optimum columns created according to the program and the original bridge column cross-section drawings are compared in Figures 5-1 to 5-11 to demonstrate size and reinforcement savings. On these figures transverse and longitudinal reinforcement weights are given per m^3. The total amount of rebars includes also the cap beam-column joint and foundation-column joint reinforcements, but total concrete volume corresponds to the column concrete volume only. The weight of transverse and longitudinal reinforcements per m^3 are larger for short bridge columns accordingly.

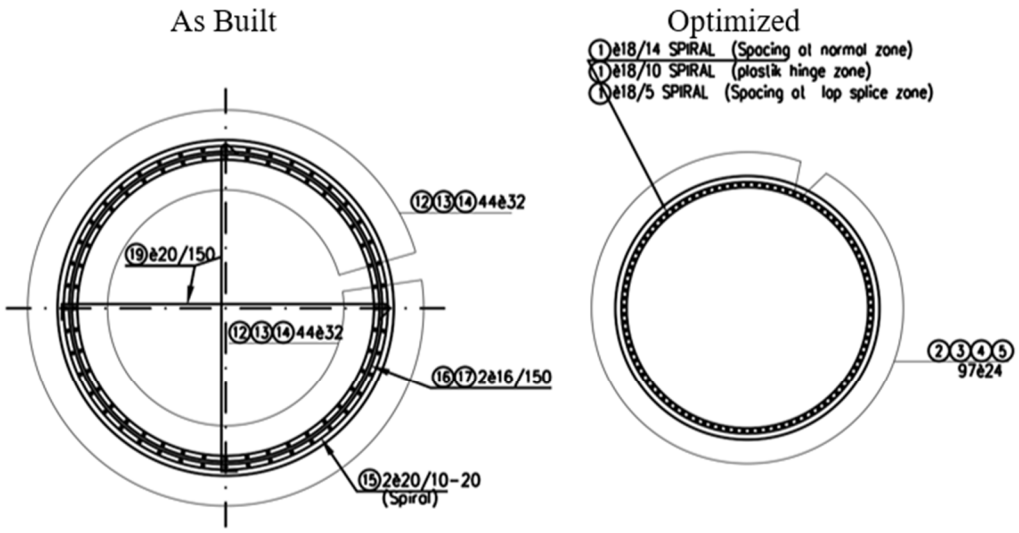

Properties	As Built	Optimized
Section Type	CS	CS
Concrete volume per meter (m^3/m)	6,16	3,80
Long. Rebars Weight (kg/m^3)	139,19	129,36
Transv. Rebars Weight (kg/m^3)	34,33	46,34
Splice Type	Lap Splice	Lap Splice

Figure 5-1 Comparison of as built and optimum column for bridge 1 scenario 1

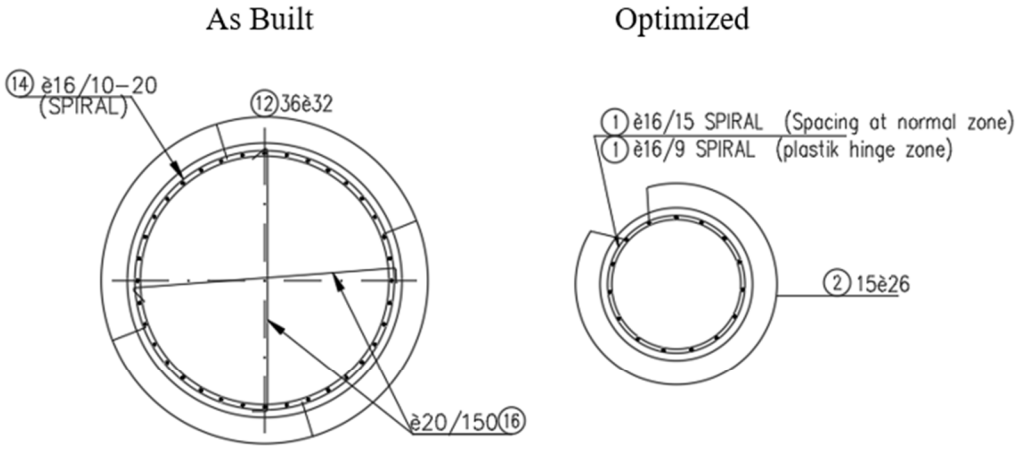

Properties	As Built	Optimized
Section Type	CS	CS
Concrete volume per meter (m^3/m)	2,54	0,79
Long. Rebars Weight (kg/m^3)	143,22	124,27
Transv. Rebars Weight (kg/m^3)	94,80	78,95
Splice Type	No Splice	No Splice

Figure 5-2 Comparison of as built and optimum column for bridge 2 scenario 1

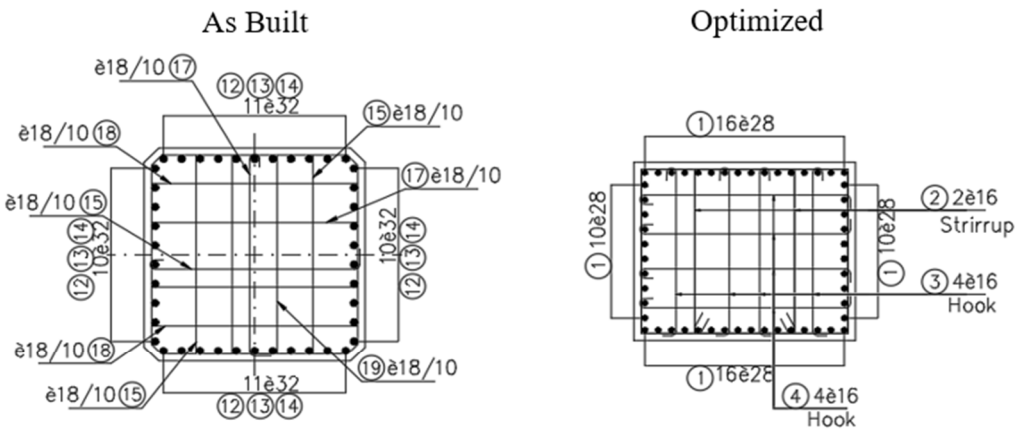

Properties	As Built	Optimized
Section Type	RS	RS
Concrete volume per meter (m^3/m)	2,25	1,88
Long. Rebars Weight (kg/m^3)	202,15	261,54
Transv. Rebars Weight (kg/m^3)	401,58	270,20
Splice Type	No Splice	No Splice

Figure 5-3 Comparison of as built and optimum column for bridge 3 scenario 1

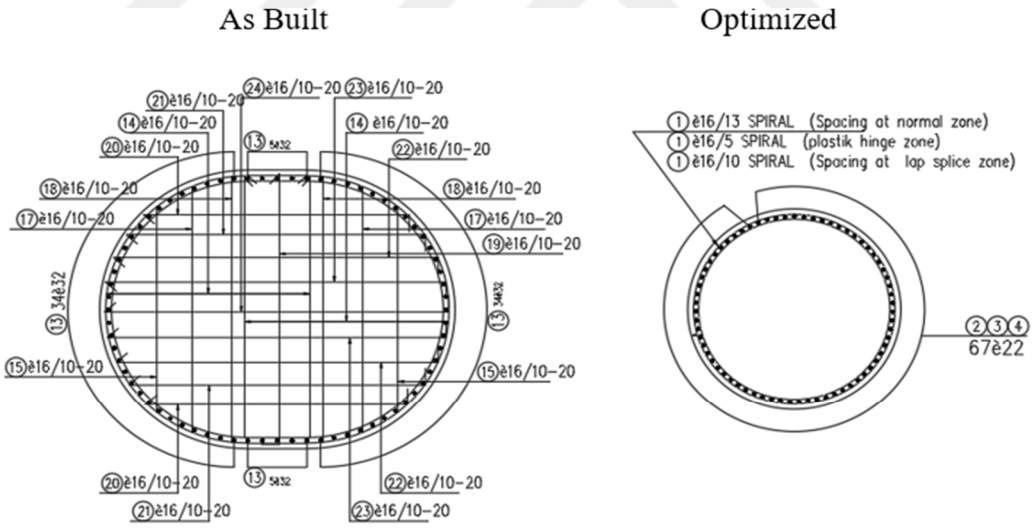

Properties	As Built	Optimized
Section Type	SCS	CS
Concrete volume per meter (m^3/m)	6,16	2,54
Long. Rebars Weight (kg/m^3)	119,27	99,46
Transv. Rebars Weight (kg/m^3)	160,96	57,70
Splice Type	Lap Splice	Lap Splice

Figure 5-4 Comparison of as built and optimum column for bridge 4 scenario 1

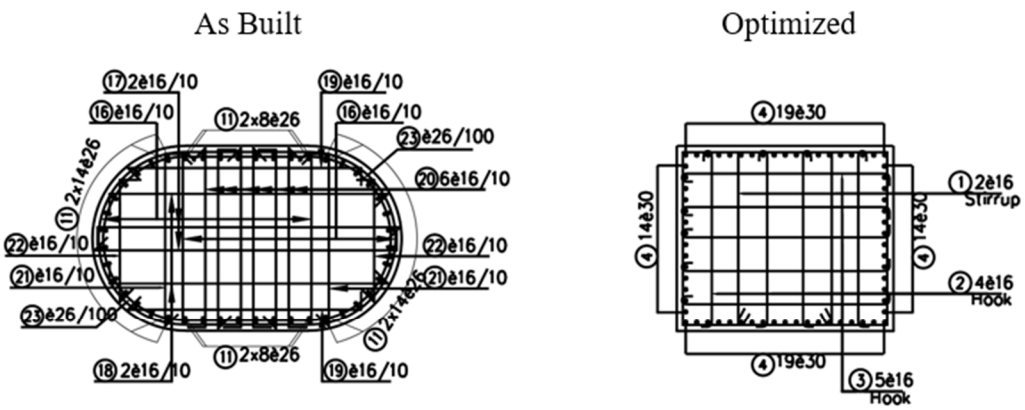

Properties	As Built	Optimized
Section Type	SCS	RS
Concrete volume per meter (m^3/m)	3,27	2,63
Long. Rebars Weight (kg/m^3)	208,17	220,69
Transv. Rebars Weight (kg/m^3)	262,16	192,96
Splice Type	Lap Splice	Lap Splice

Figure 5-5 Comparison of as built and optimum column for bridge 5 scenario 1

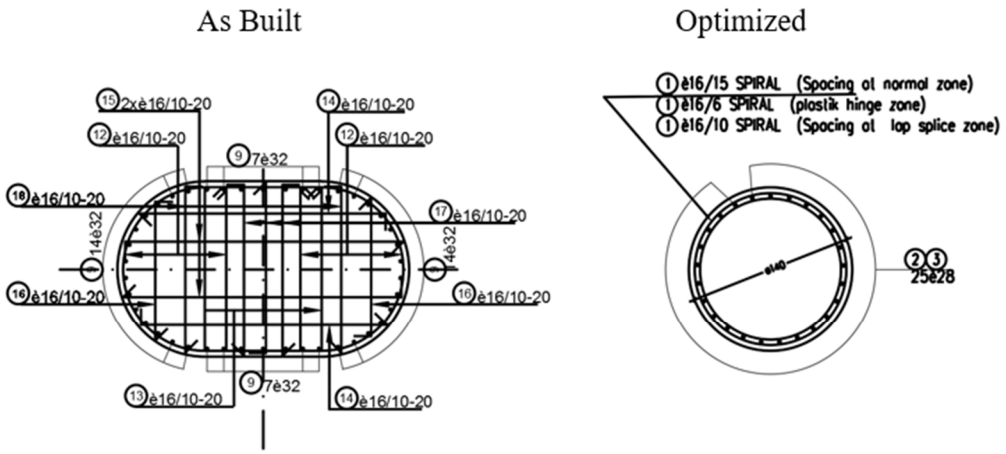

Properties	As Built	Optimized
Section Type	SCS	CS
Concrete volume per meter (m^3/m)	3,27	1,54
Long. Rebars Weight (kg/m^3)	118,96	103,93
Transv. Rebars Weight (kg/m^3)	162,95	60,16
Splice Type	Lap Splice	Lap Splice

Figure 5-6 Comparison of as built and optimum column for bridge 6 scenario 1

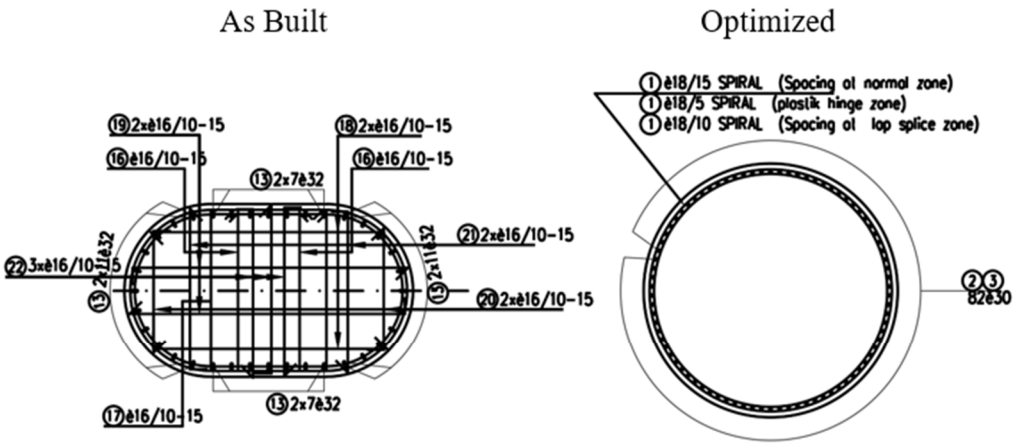

Properties	As Built	Optimized
Section Type	SCS	CS
Concrete volume per meter (m^3/m)	3,27	3,80
Long. Rebars Weight (kg/m^3)	222,52	167,28
Transv. Rebars Weight (kg/m^3)	182,41	59,01
Splice Type	Lap Splice	Lap Splice

Figure 5-7 Comparison of as built and optimum column for bridge 7 scenario 1

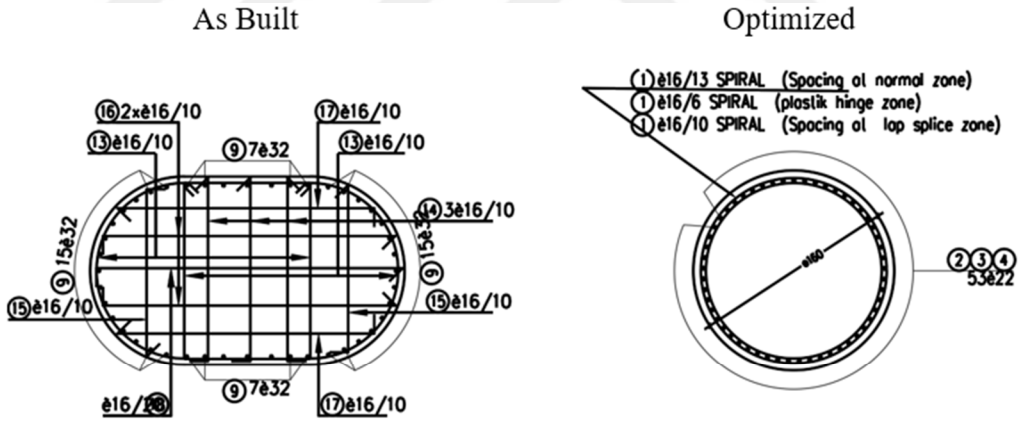

Properties	As Built	Optimized
Section Type	SCS	CS
Concrete volume per meter (m^3/m)	3,27	2,01
Long. Rebars Weight (kg/m^3)	161,17	107,49
Transv. Rebars Weight (kg/m^3)	127,94	52,98
Splice Type	Lap Splice	Lap Splice

Figure 5-8 Comparison of as built and optimum column for bridge 8 scenario 1

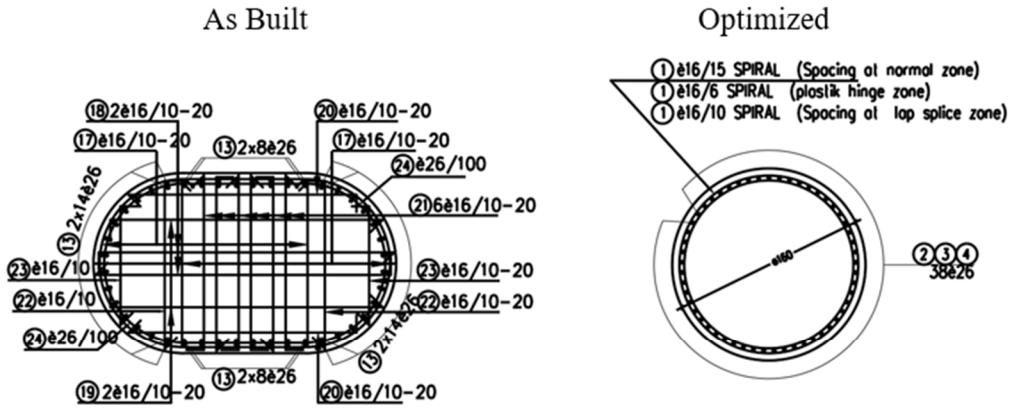

Properties	As Built	Optimized
Section Type	SCS	CS
Concrete volume per meter (m^3/m)	3,27	2,01
Long. Rebars Weight (kg/m^3)	188,59	111,24
Transv. Rebars Weight (kg/m^3)	198,79	55,50
Splice Type	Lap Splice	Lap Splice

Figure 5-9 Comparison of as built and optimum column for bridge 9 scenario 1

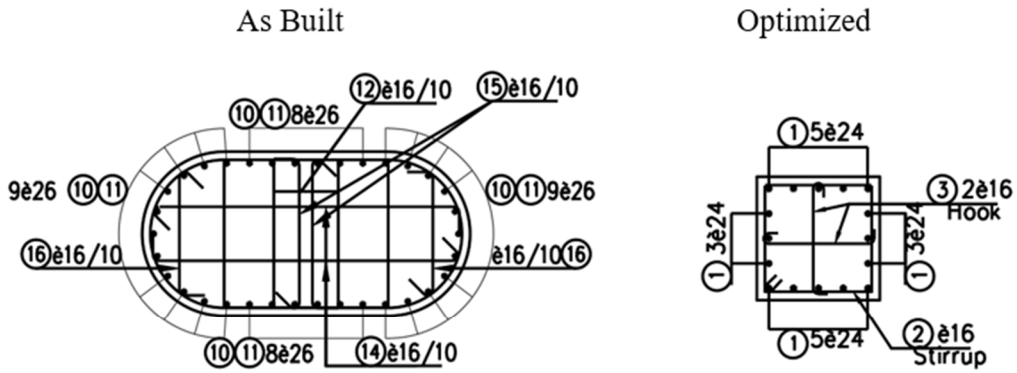

Properties	As Built	Optimized
Section Type	SCS	RS
Concrete volume per meter (m^3/m)	1,79	0,56
Long. Rebars Weight (kg/m^3)	164,55	153,20
Transv. Rebars Weight (kg/m^3)	230,17	120,28
Splice Type	No Splice	No Splice

Figure 5-10 Comparison of as built and optimum column for bridge 10 scenario 1

As Built

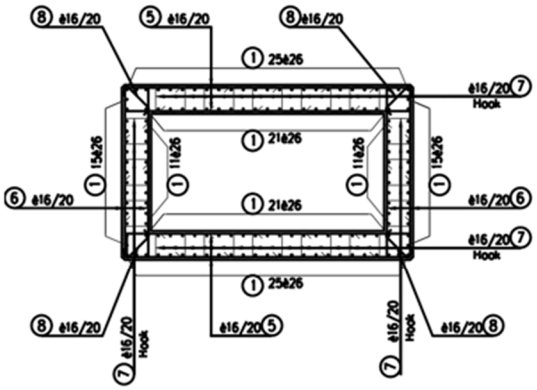

Optimized

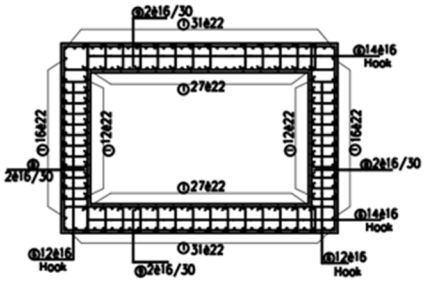

Properties	As Built	Optimized
Section Type	HS	HS
Concrete volume per meter (m^3/m)	7,00	6,50
Long. Rebars Weight (kg/m^3)	122,48	104,89
Transv. Rebars Weight (kg/m^3)	118,78	113,71
Splice Type	Lap Splice	Lap Splice

Figure 5-11 Comparison of as built and optimum column for bridge 11 scenario 1

Cost comparison summary of scenario 1 optimization is listed in Table 5-1.

Table 5-1 Scenario 1 Cost Comparison

Bridge NO	Optimum Cost (TL)	Original Cost (TL)	Over Design Cost Ratio
Bridge 1	1.181.642	2.042.137	73
Bridge 2	38.521	148.683	286
Bridge 3	448.678	651.504	45
Bridge 4	1.275.783	4.887.283	283
Bridge 5	1.385.004	1.981.971	43
Bridge 6	490.652	1.605.849	227
Bridge 7	1.180.088	1.709.117	45
Bridge 8	497.269	1.301.544	162
Bridge 9	417.269	1.341.942	222
Bridge 10	27.118	109.910	305
Bridge 11	2.231.606	2.685.516	20
Average	833.966	1.678.678	101

As can be seen from the Table 5-1 and the Figure 5-12 below, this optimization tool has successfully optimized all 11 bridges. On average, these bridge columns could have been designed and constructed 50 percent cheaper if it was allowed to select a different section geometry. Bridge 11 has the lowest overdesign rate, at 20 percent. This was due to the column length being too tall; the cross section could not be optimized enough due to the console length limitation of the cap beam. However, if this cantilever length of cap beam limitation was neglected, the cost of the cap beam formwork would increase. Using this tool 7 circular sections, 3 rectangular sections and 1 hollow section were designed as optimum geometries for these 11 bridges; the semi-circular section was never the most economical column choice in any of the bridges considered. This shows that the semi-circular section is the least efficient among the given sections.

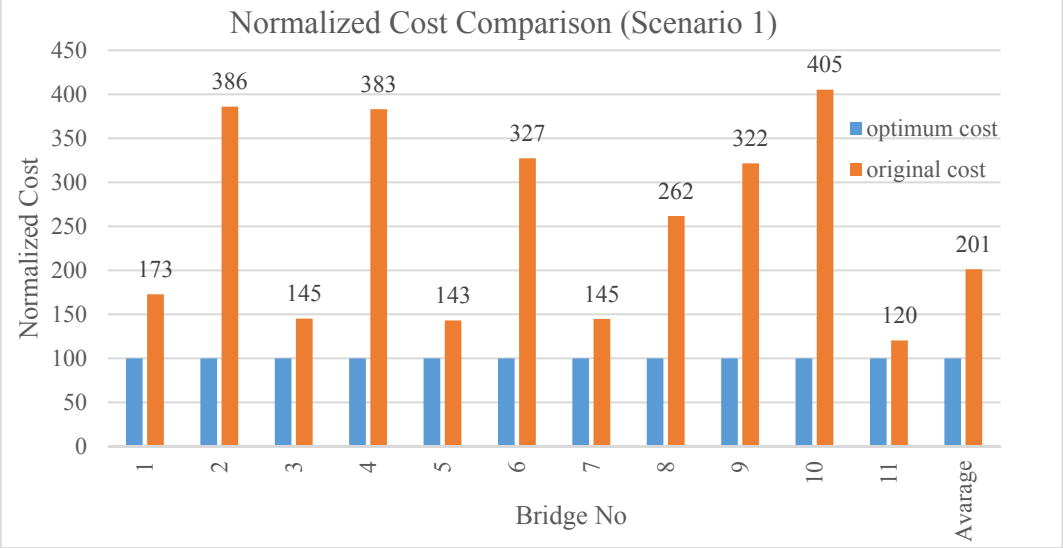

Figure 5-12 Normalized Cost Comparison for Scenario 1

5.2 Results of Scenario 2

Scenario 2 is the scenario where the optimum column is calculated among the sections with similar geometry so that the original bridge column geometry is preserved. For example, if the original bridge column was designed as a rectangular cross-section, the optimization was done only between the rectangular cross-sections

and more optimum alternative for example circular section was not selected. This enabled optimization by preserving the architectural setup or other concerns such as the similar restrictive factors in the design or the availability of the formwork. The optimization tool offers the section type option in its interface for this purpose.

For 11 bridges in the case study, according to the original bridge column geometry, the most economical results among 2028 sections for circular sections, 4005 sections for rectangular sections, 1186 sections for semi-circular sections, and 7411 sections for box sections were selected, according to the original bridge column geometry. The cross-sectional drawings of the optimum columns created are compared to the original bridge column cross-section drawings in Figures 5-13 to 5-23 in order to demonstrate size and reinforcement savings. On these figures, transverse and longitudinal reinforcement weights are given per m3. The total amount of rebars includes also the cap beam-column joint and foundation-column joint reinforcements, but total concrete volume corresponds to the column concrete volume only. The weight of transverse and longitudinal reinforcements per m^3 are larger for short bridge columns accordingly.

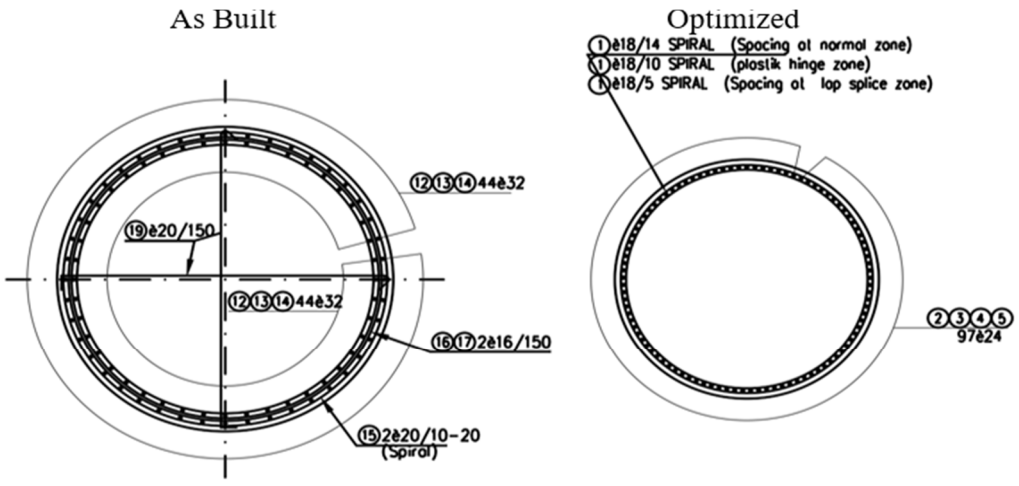

Properties	As Built	Optimized
Section Type	CS	CS
Concrete volume per meter (m^3/m)	6,16	3,80
Long. Rebars Weight (kg/m^3)	139,19	129,36
Transv. Rebars Weight (kg/m^3)	34,33	46,34
Splice Type	Lap Splice	Lap Splice

Figure 5-13 Comparison of as built and optimum column for bridge 1 scenario 2

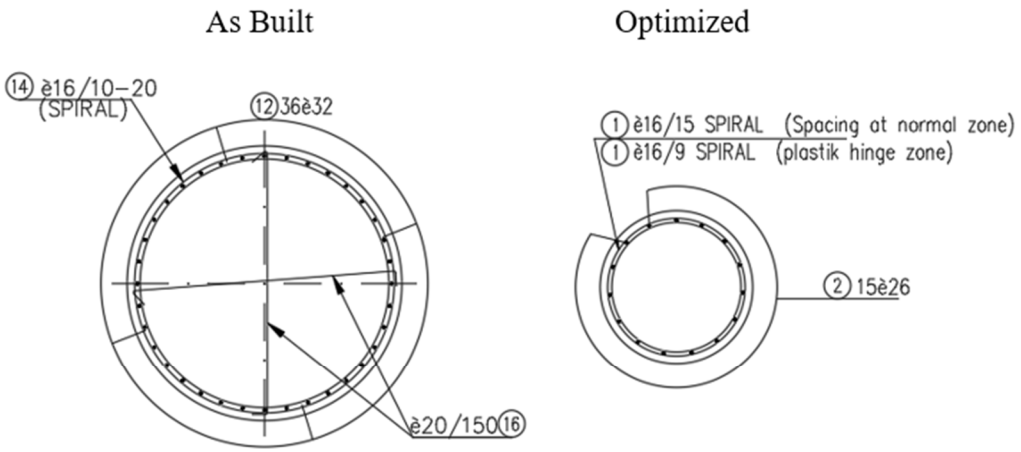

Properties	As Built	Optimized
Section Type	CS	CS
Concrete volume per meter (m^3/m)	2,54	0,79
Long. Rebars Weight (kg/m^3)	143,22	124,27
Transv. Rebars Weight (kg/m^3)	94,80	78,95
Splice Type	No Splice	No Splice

Figure 5-14 Comparison of as built and optimum column for bridge 2 scenario 2

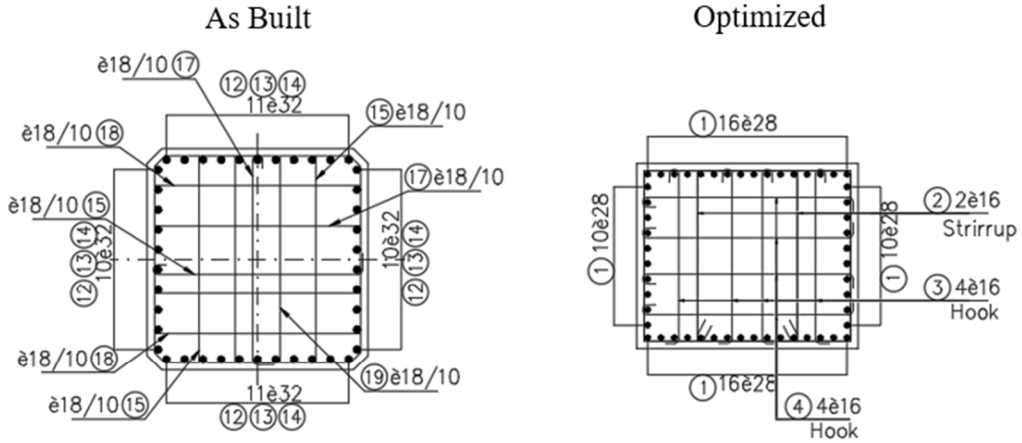

Properties	As Built	Optimized
Section Type	RS	RS
Concrete volume per meter (m^3/m)	2,25	1,88
Long. Rebars Weight (kg/m^3)	202,15	261,54
Transv. Rebars Weight (kg/m^3)	401,58	270,20
Splice Type	No Splice	No Splice

Figure 5-15 Comparison of as built and optimum column for bridge 3 scenario 2

As Built

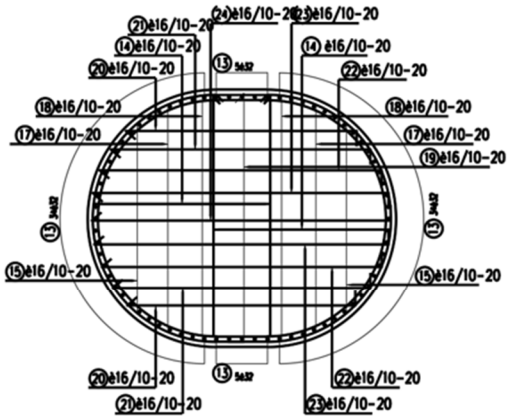

Optimized

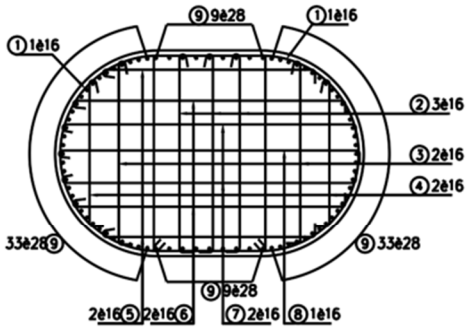

Properties	As Built	Optimized
Section Type	SCS	SCS
Concrete volume per meter (m^3/m)	6,16	5,14
Long. Rebars Weight (kg/m^3)	119,27	95,74
Transv. Rebars Weight (kg/m^3)	160,96	105,01
Splice Type	Lap Splice	Mechanical Splice

Figure 5-16 Comparison of as built and optimum column for bridge 4 scenario 2

As Built

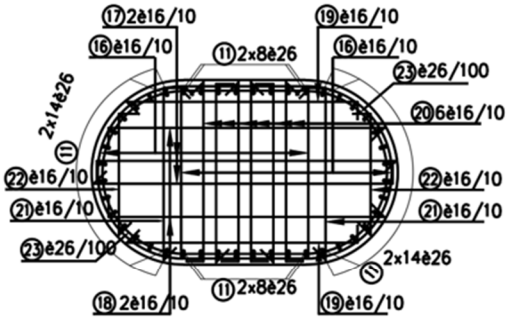

Optimized

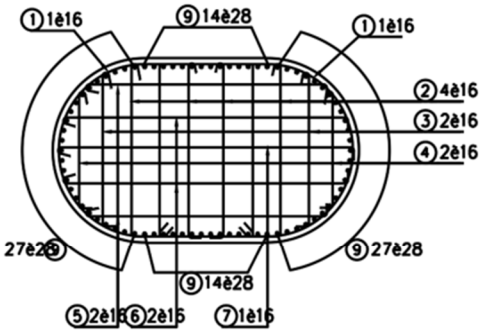

Properties	As Built	Optimized
Section Type	SCS	SCS
Concrete volume per meter (m^3/m)	3,27	3,27
Long. Rebars Weight (kg/m^3)	208,17	185,69
Transv. Rebars Weight (kg/m^3)	262,16	215,94
Splice Type	Lap Splice	Lap Splice

Figure 5-17 Comparison of as built and optimum column for bridge 5 scenario 2

As Built

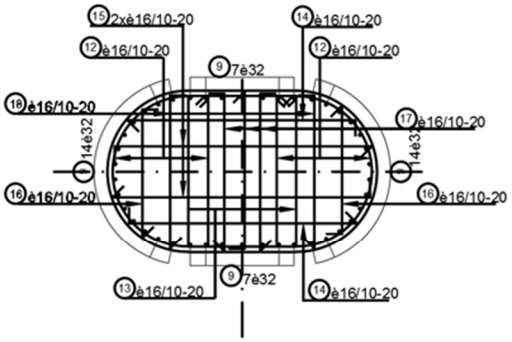

Optimized

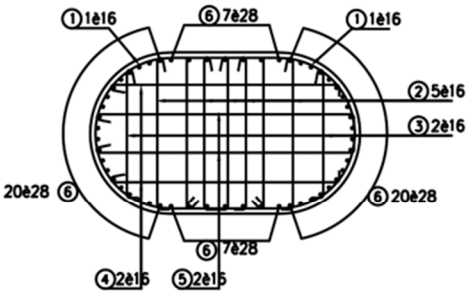

Properties	As Built	Optimized
Section Type	SCS	SCS
Concrete volume per meter (m^3/m)	3,27	3,27
Long. Rebars Weight (kg/m^3)	118,96	106,26
Transv. Rebars Weight (kg/m^3)	162,95	121,79
Splice Type	Lap Splice	Lap Splice

Figure 5-18 Comparison of as built and optimum column for bridge 6 scenario 2

As Built

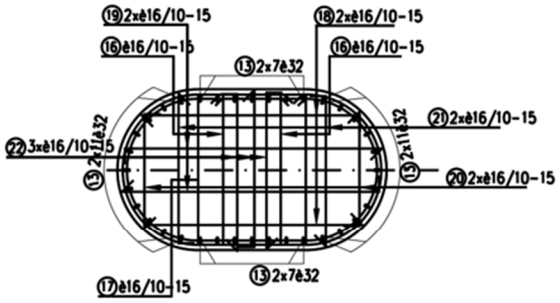

Optimized

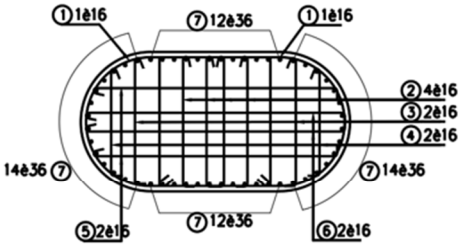

Properties	As Built	Optimized
Section Type	SCS	SCS
Concrete volume per meter (m^3/m)	3,27	2,89
Long. Rebars Weight (kg/m^3)	222,52	200,82
Transv. Rebars Weight (kg/m^3)	182,41	144,75
Splice Type	Lap Splice	Mechanical Splice

Figure 5-19 Comparison of as built and optimum column for bridge 7 scenario 2

As Built

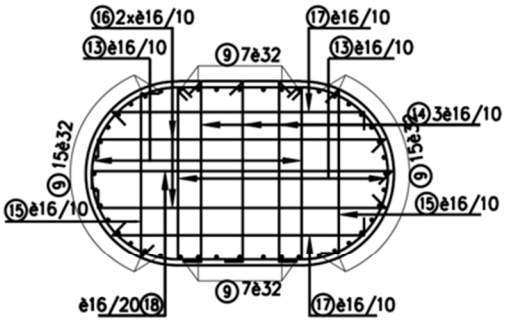

Optimized

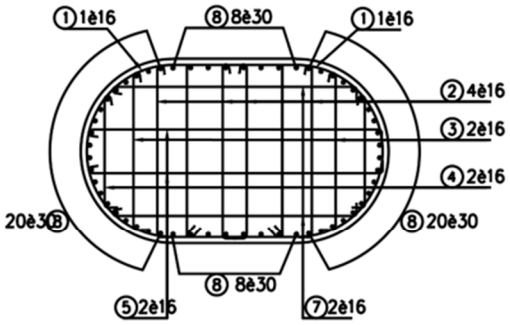

Properties	As Built	Optimized
Section Type	SCS	SCS
Concrete volume per meter (m^3/m)	3,27	3,27
Long. Rebars Weight (kg/m^3)	161,17	114,54
Transv. Rebars Weight (kg/m^3)	127,94	113,87
Splice Type	Lap Splice	Mechanical Splice

Figure 5-20 Comparison of as built and optimum column for bridge 8 scenario 2

As Built

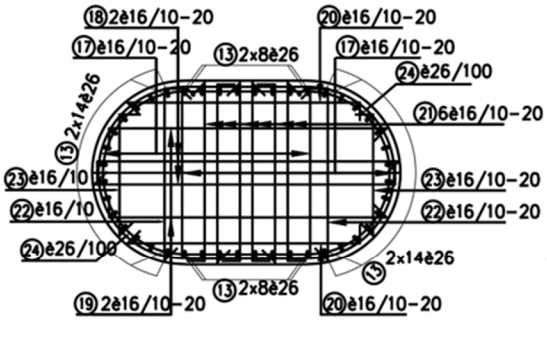

Optimized

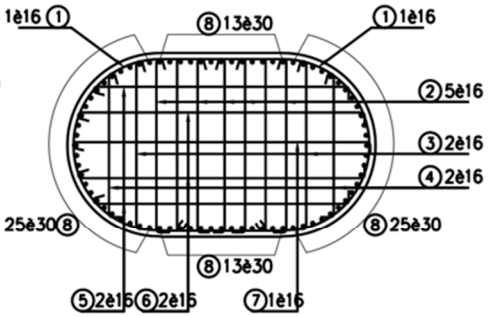

Properties	As Built	Optimized
Section Type	SCS	SCS
Concrete volume per meter (m^3/m)	3,27	3,27
Long. Rebars Weight (kg/m^3)	188,59	185,25
Transv. Rebars Weight (kg/m^3)	198,79	171,12
Splice Type	Lap Splice	Lap Splice

Figure 5-21 Comparison of as built and optimum column for bridge 9 scenario 2

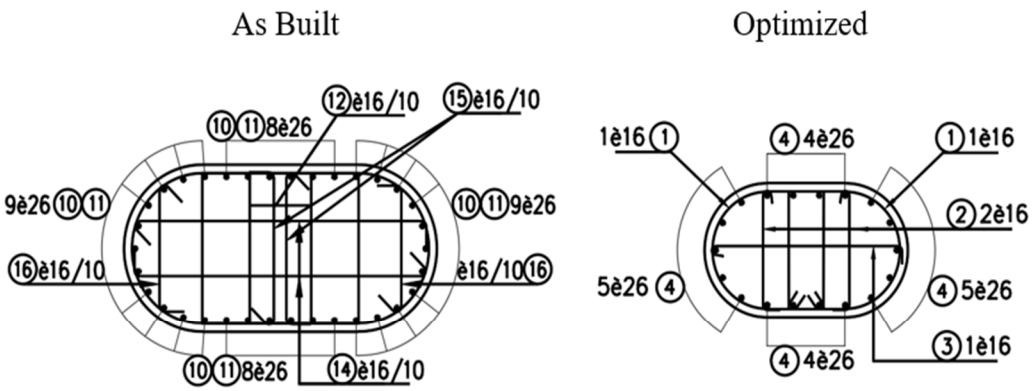

Properties	As Built	Optimized
Section Type	SCS	SCS
Concrete volume per meter (m^3/m)	1,79	0,90
Long. Rebars Weight (kg/m^3)	164,55	126,04
Transv. Rebars Weight (kg/m^3)	230,17	147,38
Splice Type	No Splice	No Splice

Figure 5-22 Comparison of as built and optimum column for bridge 10 scenario 2

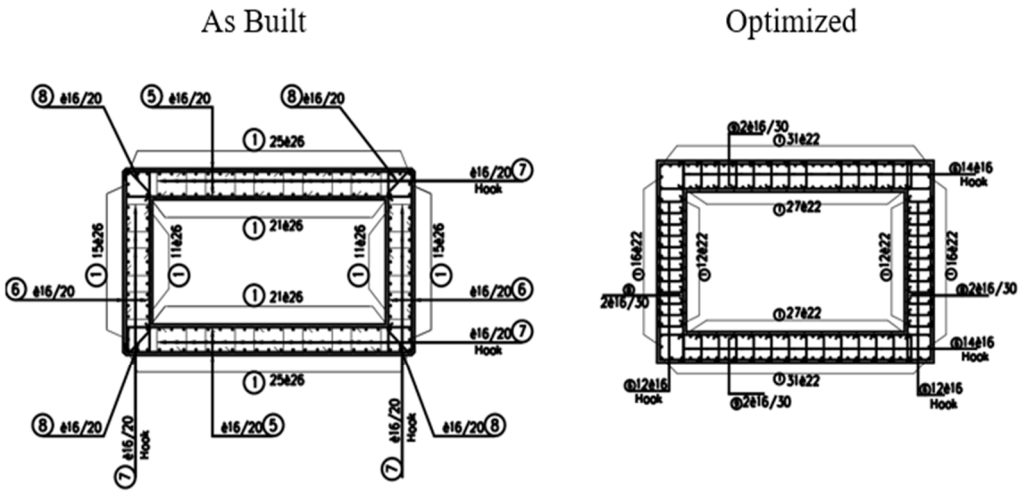

Properties	As Built	Optimized
Section Type	HS	HS
Concrete volume per meter (m^3/m)	7,00	6,50
Long. Rebars Weight (kg/m^3)	122,48	104,89
Transv. Rebars Weight (kg/m^3)	118,78	113,71
Splice Type	Lap Splice	Lap Splice

Figure 5-23 Comparison of as built and optimum column for bridge 11 scenario 2

As can be seen from the Table 5-2 and the Figure 5-24, this optimization tool has successfully optimized all 11 bridges. On average, these bridge columns could have been designed and built 24 percent more economical.

Table 5-2 Scenario 2 Cost Comparison

Bridge NO	Optimum Cost (TL)	Original Cost (TL)	Over Design Cost Ratio
Bridge 1	1181642	2042137	73
Bridge 2	38521	148683	286
Bridge 3	448678	651504	45
Bridge 4	3530443	4887283	38
Bridge 5	1709730	1981971	16
Bridge 6	1322984	1605849	21
Bridge 7	1312184	1709117	30
Bridge 8	1137155	1301544	14
Bridge 9	1108489	1341942	21
Bridge 10	41869	109910	163
Bridge 11	2231606	2685516	20
Average	1278482	1678678	31

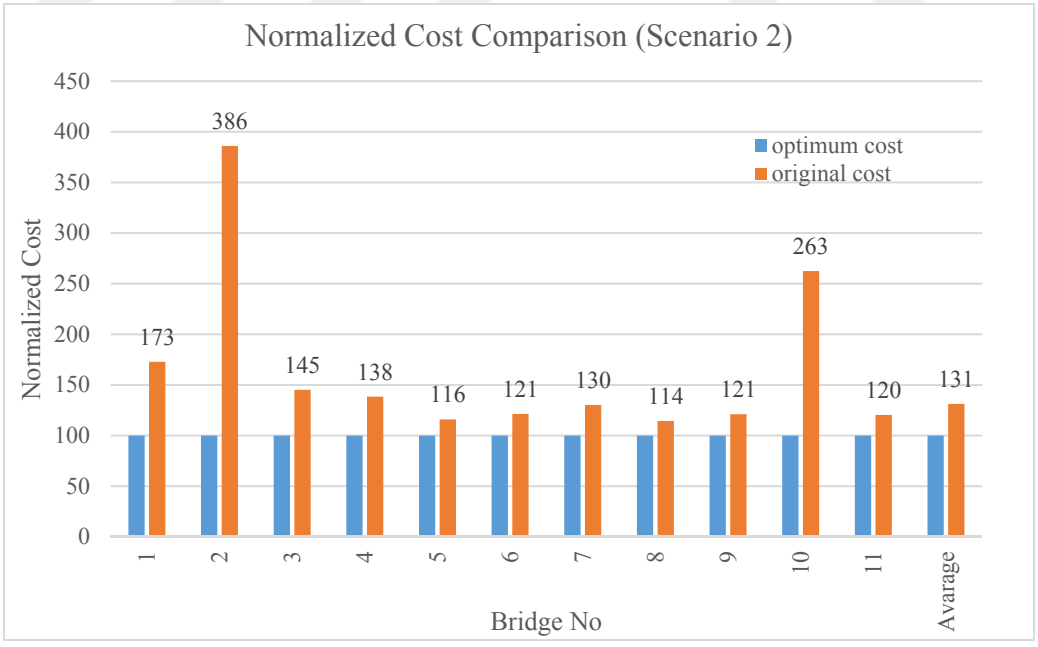

Figure 5-24 Normalized Cost Comparison for Scenario 2

CHAPTER 6

CONCLUSIONS

The results presented in Sections 3.1 and 3.2 show the built tool was very successful in optimizing the bridge columns. For investigated 11 cases, it has been shown that cheaper design corresponding to 50% savings on the average is possible in Section 5.1. These newly proposed columns meet all the requirements of AASHTO, and also yield successful results in performance controls as shown in Chapter 4. It has also been observed that the optimized columns of randomly selected 3 bridges, whose performance has been evaluated, are not much different from the performance of the original bridge columns. This is quite natural because the response modification factors specified in AASHTO are the same in these newly optimized columns.

In scenario 1 optimization, it has been observed that the optimized results generally consist of circular sections. This is due to the minimum requirements for transverse reinforcement values in the design of circular sections. For example, as can be seen in Figure 3-15, the transverse reinforcement costs of circular sections were considerably less than rectangular, semi-circular and hollow sections under similar demands. This is due to the high efficiency of the spiral reinforcement, because according to AASHTO, when spiral reinforcement is used, the ties are only placed to meet the extra shear demand. In other section types, one has to keep the longitudinal reinforcements with a certain distance in transverse direction according to the specification, and the stirrups are not sufficient. This results in additional ties for the longitudinal bars. Even in cases where the design specification is not governed by the minimum values, the diameter of the spiral reinforcement is increased or the spacing is decreased, instead of using ties in addition to spirals in circular sections. This is a more economical solution compared to the tie placement because the ends of the tie must be bent according to the specification details and

wrapped around the longitudinal reinforcement. This means more transverse rebar length and additional reinforcement cost. In short, these are the reasons why circular sections are more economical than other alternatives.

The semi-circular column type, which is a commonly preferred section in Turkish highway bridge design practice, was never found as to be the most economical section in scenario 1 optimization. This section should not be preferred unless there are other concerns. Of the 11 bridges considered 7 semi-circular columns showing how widely the column type is adopted in design in Turkey. If one reflects this ratio to all bridges, it appears that more than 60% of bridges are overdesign and uneconomical.

In the light of the cost distribution graphs shown in Section 3.2, it can be observed that the longitudinal and the transverse reinforcement cost are almost close to each other. This is a factor that shows why it is necessary to include the transverse reinforcement into optimization calculations.

Coupler (mechanical splice) costs are still high on the market compared to reinforcement. Using a coupler is more expensive than lap splicing required for each rebar diameter. According to AASHTO, the transverse reinforcement spacing is limited to 10 cm in overlapping areas. In other words, the use of couplers is a factor that may reduce not only the cost of longitudinal reinforcement, but also the cost of transverse reinforcement due to use of shorter longitudinal and transverse bars. However, despite all these benefits, the design with couplers was not obtained as an optimum case for any bridge in scenario 1 optimization. The fact that the optimum cross-sections obtained in scenario 1 are generally circular and therefore the transverse reinforcement costs are low, is one of the reasons why the design with couplers was not economical. In Scenario 2 optimization, the mechanical splice type was found to be more economical in 3 bridges: Bridge 4, Bridge 7 and Bridge 8. These 3 bridges have semi-circular cross-section columns with high transverse reinforcement density. Therefore, the use of couplers is more economical in these 3 bridges. However, out of a total of 22 optimization studies consisting of 2 scenarios

and 11 bridges, 6 of them are bridges that do not need either mechanical splice or lap splice due to their short column length. The fact that only 3 of the 16 different optimized cases are economical with mechanical splicing shows that the coupler prices are not yet low enough to produce "always optimum'' results.

Bridge column optimization tool calculates the costs shown in the above sections using certain assumptions. Longitudinal reinforcements, overlap lengths and coupler costs are calculated exactly. However, when calculating stirrups and ties lengths for transverse reinforcements some assumptions have to be made. For instance, for semi-circular cross-sections, equivalent rectangular cross-section dimensions of the cross-section were found and the calculations were calculated for transverse reinforcement lengths accordingly. In addition, the reinforcement needed for workmanship were not taken into consideration during cost calculations. CAD drawings of the real sections, which are exact in terms of reinforcement are compared with the estimations to assess this assumption in Table 6-1, Figure 6-1 and Figure 6-2.

Table 6-1 Cost Comparison between tool and drawing results

	Scenario 1		Scenario 2	
Bridge No	Drawing Cost	Tool Cost	Drawing Cost	Tool Cost
Bridge 1	103	100	103	100
Bridge 2	102	100	102	100
Bridge 3	106	100	106	100
Bridge 4	101	100	98	100
Bridge 5	104	100	101	100
Bridge 6	101	100	101	100
Bridge 7	103	100	102	100
Bridge 8	101	100	100	100
Bridge 9	100	100	106	100
Bridge 10	95	100	99	100
Bridge 11	104	100	104	100

The costs in the Table 6-1 were normalized according to each bridge's optimized cost (100). For Scenario 1, the mean value for normalized costs was 101.9 with 2.6 standard deviation. For Scenario 2, the mean value for normalized costs was 102.0

with 2.6 standard deviation. It can be stated that the assumptions due to the missing information in algorithm did not significantly affect the cost, and the output results were so close the final cost.

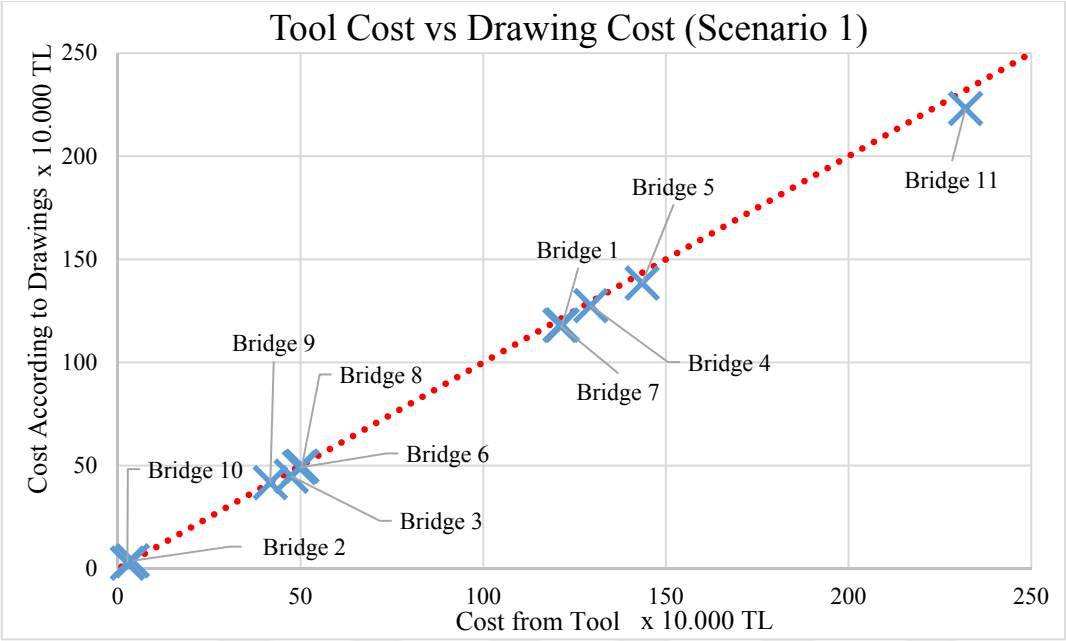

Figure 6-1 Drawing cost and tool cost comparison for Scenario 1

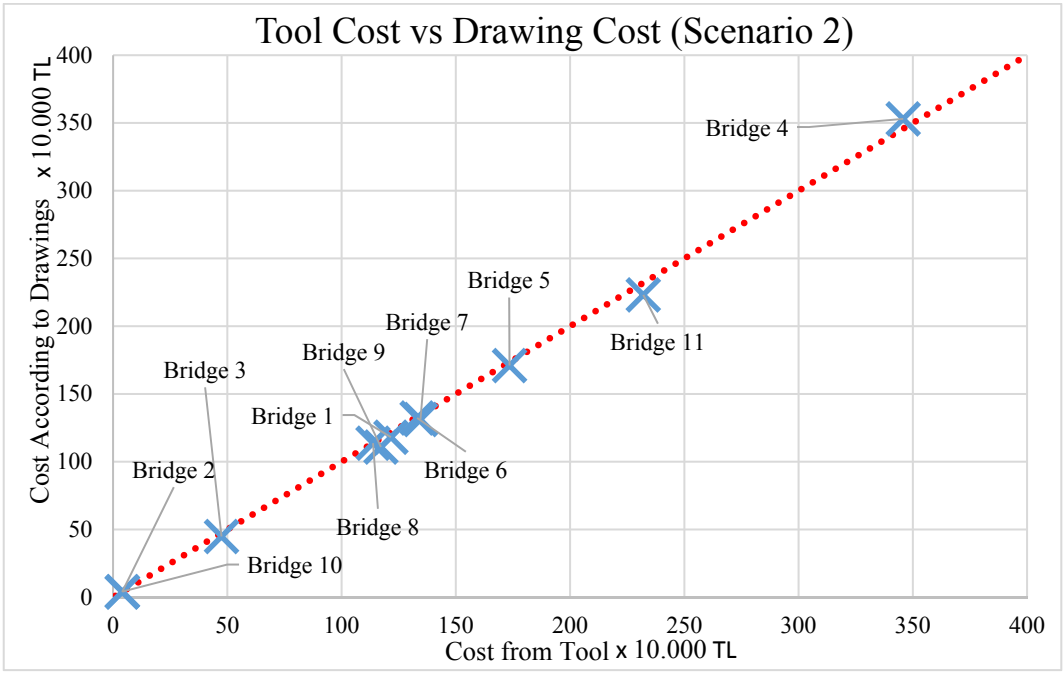

Figure 6-2 Drawing cost and tool cost comparison for Scenario 2

Based on the previous discussions one can estimate the potential benefits of column cost optimization. According to the data of the Turkish Ministry of Transport and Infrastructure, the construction of a total of 146 bridges was completed in 2021. The total length of these bridges was 23 km. The average length per bridge was about 157 meters. The total length of 11 bridges used in this thesis case study was 1661 meters and the average length per bridge was 151 meters. Comparing the bridges built in Turkey in 2021 with the case study bridges, the average span length per bridge was similar. This enables extrapolation using the 11 bridges in this study and the bridges built in Turkey in 2021. Of course, factors such as bridge width and height of columns affect the cost considerably, but it is also a reasonable approach to calculate bridge costs in proportion to bridge span lengths. The column cost per meter span length of the 11 bridges used in this study was 11,114 TL. When we combine this with the data of total constructed bridge length in 2021, the total column cost of the bridges built in Turkey in 2021 was 255.6 million TL. The utilized tool has shown that column cost can be reduced by an average of 50 percent. In this way, it can be said that the bridges constructed in 2021 were constructed at an extra cost of 127.8 million TL. A saving of about 10 million $ per year is significant improvement for the Turkish economy by using this column cost minimizer tool.

This column optimization tool only optimizes the columns and all results are calculated considering only column costs. In an average standard highway bridge, the ratio of column costs to total bridge cost is around 10-15%. However, if the columns are optimized in a bridge, the column foundations and the cap beams to which the columns are joined could be more economically designed. This means designing the elements that heavily affect the total bridge costs more economically. Cap beams, columns and foundations cover 30-35 percent of the total cost of standard highway bridges. The economic advantage of this tool is likely greater than the numbers given above.

The optimization conducted within the scope of this thesis was made without changing the number of columns in the pier bent of the constructed bridges. For example, if a bridge has two columns at the pier bent, the proposed tool optimizes

the column cross-section based on two-columns bent case. On the other hand, changing the number of columns in a pier bent can yield more economical results. For instance, a three-column bent solution of a pier may result in more economical solution than a two-column bent pier. In future, this study could be extended to obtain the most efficient number of columns at any bent. Moreover, the effect of optimum column design on the cost of foundation and cap beam of bridges should be investigated in more detail.

The costs mentioned in this study include only the construction costs of the bridges. Besides the construction costs, the maintenance cost for bridges can also be significant. This subject is generally not detailed in the specifications. From bridge engineering point of view, there are no clear guidelines for considering the maintenance cost. Evaluation of maintenance should be studied along with the effect of maintenance cost on the total costs. Within the scope of this thesis, the crack width comparison between optimized and existing piers was investigated. Crack width can be an important indicator in determining the maintenance costs and such design limits can be introduced in the specifications.

REFERENCES

AASHTO. (2012). Guide Specifications for LRFD Seismic Bridge Design, 6th Edition. In American Association of State Highway and Transportation Officials, Washington, DC.

Almutairi, Abdullah et al. "Analysis of Multi-span Bridges Using OpenSees." (2016).

Bavirisetty, Rambabu, et al. Bridge Engineering Handbook. CRC Press, Taylor & Francis Group, 2000.

Building Code Requirements for Structural Concrete (aci 318-08) and Commentary. Farmington Hills, Mich: American Concrete Institute, 2008. Print.

Chadwell, C. B., and R. A. Imbsen. "Xtract: A Tool for Axial Force - Ultimate Curvature Interactions." Structures 2004, doi:10.1061/40700(2004)178.

Chen, Wai-Fah, and Lian Duan. Bridge Engineering Handbook. CRC Press, 1999.

Chopra, Anil K., and Rakesh K. Goel. "A Modal Pushover Analysis Procedure for Estimating Seismic Demands for Buildings." Earthquake Engineering & Structural Dynamics, vol. 31, no. 3, 2002, pp. 561–582., doi: 10.1002/eqe.144

Computers & Structures Inc. (2016). CSI ETABS v.2021. SAP2000 Reference Manual, (July), 556.

FHWA, Seismic Retrofitting Manual for Highway Structures, Federal Highway Administration, Office of Research, Development and Technology, Turner-Fairbank Highway Research Center, 2006.

Gergely, Peter, and Leroy A. Lutz. "Maximum Crack Width in Reinforced Concrete Flexural Members." ACI Structural Journal, vol. 10, no. 12, June 2005, pp. 87–117.

Kappos, Andreas J., et al., editors. “Seismic Design and Assessment of Bridges.” Geotechnical, Geological and Earthquake Engineering, vol. 21, 2012, doi: 10.1007/978-94-007-3943-7.

Kıyı ve Liman Yapıları, Demiryolları, Hava Meydanları İnşaatlarına İlişkin Deprem Teknik Yönetmeliği. (2008). T.C Resmi Gazete, 27092, 26 Aralık 2008.

Lee, H. J., Aschheim, M., Hernández-Montes, E., & Gil-Martín, L. M. (2008). Optimum RC column reinforcement considering multiple load combinations. Structural and Multidisciplinary Optimization, 39(2), 153–170. https://doi.org/10.1007/s00158-008-0318-4

Mackie, Kevin R., et al. “Nonlinear Time History Analysis of Ordinary Standard Brdiges.” Repository & Open Science Access Portal, Oregon State University, California Department of Transportation, May 2017, https://rosap.ntl.bts.gov/view/dot/37382

Malapur, M. M., Cholappanavar, P., & Fernandes, R. J. (2018). Optimization of RC Column and Footings Using Genetic Algorithm. International Research Journal of Engineering and Technology (IRJET), 5(8), 546–552.

Mander, J. B., et al. “Theoretical Stress-Strain Model for Confined Concrete.” Journal of Structural Engineering, vol. 114, no. 8, Sept. 1988.

Márquez, Jorge, et al. “Simplified Procedure to Obtain LRFD Preliminary Design Charts for Simple-Span Prestressed Concrete Bridge Girders.” Practice Periodical on Structural Design and Construction, vol. 21, no. 1, 7 Dec. 2015, doi: 10.1061/(asce)sc.1943-5576.0000274.

MathWorks. (2006). MatlabVersion (R2020b). Natick, MA.

Rafiq, M. Y., & Southcombe, C. (1998). Genetic algorithms in optimal design and detailing of reinforced concrete biaxial columns supported by a declarative approach for capacity checking. Computers & Structures, 69(4), 443–457. https://doi.org/10.1016/s0045-7949(98)00108-4

Rasheed, Hayder, et al. “KDOT Column Expert Ultimate Shear Capacity of Circular Columns Using the Simplified Modified Compression Field Theory.” Repository & Open Science Access Portal, University of Nebraska. Mid-America Transportation Center, 1 Aug. 2015, https://rosap.ntl.bts.gov/view/dot/37149.

Rathod, Kaushal Vijay, and Sumit Gupta. “A NONLINEAR TIME HISTORY ANALYSIS OF TEN STOREY RCC BUILDING.” International Research Journal of Engineering and Technology, vol. 7, no. 6, June 2020, pp. 7153–7160.

Sethy, Kaliprasanna. “Application of Pushover Analysis to RC Bridges.” *Thesis / Dissertation ETD*, 2011.

Singh, J., & Chutani, S. (2015). Column Optimization using a Direct Search Method. International Journal of Innovations in Engineering and Technology (IJIET), 5(1), 365–369.

Structure Point LLC (2019). SpColumn (v7.00).

Sucuoğlu Halûk, and Sinan Akkar. Basic Earthquake Engineering from Seismology to Analysis and Design. Springer International Publishing, 2014.

Türk Standardı, Betonarme Yapıların Tasarım ve Yapı Kuralları. Türk Standartları Enstitüsü. (Şubat 2020)

Türkiye Köprü Deprem Yönetmeliği, Ek-1 Deprem Etkisi Altında Karayolu ve Demiryolu Köprü ve Viyadükleri Tasarımı İçin Esaslar. (2020). T.C. Resmi Gazete, 31226, 6 Ekim 2020.

Türkiye, Ministry of Transport and Infrastructure., and Head of Research And Development Department. Araştirma Ve Geliştirme Dairesi Başkanliği Ve Bölge Araştirma Ve Geliştirme Başmühendisliklerinin Görevleriyle İlgili Hizmetler İçin 2021 Yili 1.Dönemi Birim Fiyat Listesi, 2021.

Türkiye, Ministry of Transport and Infrastructure. Ulaşan Ve Erişen Türkiye, 2021.

Verma, R., & Priestley, M. J. (1994). Optimal trends in seismic design of single column circular reinforced concrete bridge piers. Earthquake Spectra, 10(3), 589–614. https://doi.org/10.1193/1.1585790

Wight, James K., and James G. MacGregor. Reinforced Concrete Mechanics and Design. Pearson, 2021.